RECORD OF PUBLIC BID OPENING

REQUISITION # D-004630
PROJECT: STAGE 2 – FENCE PROJECT
Bid Closing Date: 5/10/06 @ 5:00 PM
Bid Open Date: 5/11/06 @ 10:30 AM

STATUS – AWARDED TO CROOKED FORK FENCING, LOLO MT

BIDDER: ___Crooked Fork Fencing

Item No.	Item Description	Approx. Quantity	Unit Price	Bid Amount
203-075A	Remove Fence	35,112 LF	.55	$19,311.60
610-030A	Fence, 3-B-1 (39)	35,112 LF	$2.57	$90,237.84
610-250A	Braces	106 EA	$200.00	$21,200.00

TOTAL BID $____$130,749.44__

BIDDER: __Walton Inc_____

Item No.	Item Description	Approx. Quantity	Unit Price	Bid Amount
203-075A	Remove Fence	35,112 LF	.85	$29,845.20
610-030A	Fence, 3-B-1 (39)	35,112 LF	$3.03	$106,389.36
610-250A	Braces	106 EA	$204.80	$21,708.80

TOTAL BID $____$157,943.36_

IDAHO TRANSPORTATION DEPARTMENT
REQUEST FOR BID

April 18, 2006

Idaho Transportation Department
Supply Services Purchasing Section
3311 West State Street
Boise, Idaho 83703

REQUISITION #: D-004630
STAGE 2

ALL <u>sealed bids must</u> be received by 5:00 pm on May 10, 2006. Sealed bids will be opened at 10:00 am on May 11, 2006 at Supply Services, Purchasing Office, at 3311 West State Street in Boise. The scope of work on this project consist of **furnish all labor, equipment, supplies, tools and materials required to effectively remove the existing fence and install TYPE 3-B-1(39) FENCE along I-84 at designated locations** per the specifications contained in the above requisition.

Contact Evey McAdams, Contract Program Specialist for Bid Requirements and Clarification at (208) 334 8084.

For technical questions please contact Lytle Gaskill at (208) 886 7808

Fax ALL questions regarding this bid to: (208) 332 4109

FOR BID RESULTS, PLAN HOLDERS LIST VISIT:

<u>http://itd.idaho.gov/business/business.htm</u>

RETURN BID IN A SEALED ENVELOPE <u>CLEARLY MARKED</u> AS SHOWN:

Requisition #: D-004630
Bid Close Date: 5/10/06 – 5:00 PM Bid Open Date: 5/11/06 – 10:00 AM
Item Bidding: STAGE 2 - Remove/Install Fence I-84 ROW

<u>Mailing Address</u>

Idaho Transportation Department
Supply Services Purchasing Section
P.O. Box 7129
Boise, Idaho 83707-1129

SPECIAL PROVISIONS
IDAHO PROJECT, INTERSTATE FENCE REPLACEMENT
East Bound Mile Post 269.00 to 275.65

STAGE II

The following Special Provisions and all addenda issued supplement or modify the 2004 State Standard Specifications, SP-AS Special Provisions-State Aid, This project is not federally funded.

CONTRACTOR'S NOTES

STANDARD SPECIFICATION BOOK AVAILIBILITY

The 2004 Idaho Transportation Department's Standard Specifications for Highway Construction manual is available to the contractor for $ 30.00 plus tax. Contact the Idaho Transportation Department at (208) 334-8430 to purchase.

PAGE 77, SUBSECTION 107.03 – LICENSING OF CONTRACTORS

A Public License Works will be required.

COMPLETION TIME AND LIQUIDATED DAMAGES

All work shall be done in a time frame of 40 working days.

Work shall not commence before July 1, 2006.

The amount of Liquidated Damages for failure to complete the work on time will be $500.00 per day.

The terms of this contract are not renewable.

It will be the responsibility of the Contractor to furnish sufficient equipment and personnel to perform all duties described in the specifications without additional cost to the State.

PAGE 15, SUBSECTION 103.04 - BOND REQUIREMENTS

On the acceptance of this bid for said work, the lowest responsible responsive bidder shall furnish a Performance and Payment Bond, each in the amount of the contract with approved and sufficient surety within 10 days after the contract is presented for signature.

UTILITY COORDINATION

The contractor is to request locates of buried utility facilities by contacting the Utility-One Call Center by calling 1-800-342-1585, e-mailing digline@digline.com or faxing 1-800-342-1586. The contractor will be responsible for the repair of any utility damaged by their operation at no expense to the State.

EXAMINATION OF SITE

Before submitting a bid to the State, bidders are urged to visit the site where the services are to be performed and fully inform themselves of all the conditions and limitations. Failure to do so will in no way relieve the successful bidder of the responsibility in furnishing sufficient equipment and personnel to perform all duties described in the specifications without additional cost to the state. A District 4 map is available upon request. See contacts listed within this document.

PER-CONSTRUCTION CONFERENCE

After the contract has been awarded and before work commences the contractor will meet with the Idaho Transportation Department District 4 Maintenance Engineer and / or his representatives to discuss the work performance requirements and the terms of the contract.

USE TAX

The exercise of control over State-owned material by a Contractor who is improving real property (roadways, etc.) will incur the imposition of a use tax.

Bidders are advised to consult Section 63-3609, Idaho Code, and IDAPA 35, Title 01, Chapter 02, Sales Tax Administrative Rule 012, "Contractors Improving Real Property", and Rule 013, "Road and Paving Contractors", or contact the Idaho State Tax Commission for guidance at Telephone No. (208) 334-7691.

SEDIMENT AND EROSION CONTROL

If the Contractor's operation does create any ground disturbance, either outside the existing paved area or in a staging area, the FHWA requirements found in 23CFR 650, Subpart B, Erosion and Sediment Control on Highway Construction Projects and the Idaho Transportation Department Catalog of Storm Water Best Management Practices (BMPs) shall be adhered to.
At a minimum, the contractor will be required to repair and reseed any disturbed areas as determined by the engineer. Seed will be provided by the State.

EMPLOYMENT AGENCY

The designated employment agencies are a follows:

Id Dept. of Labor: P.O. Box 158, 127W 5th St. N., Burley ID 83318-0158

626 CONSTRUCTION TRAFFIC CONTROL

Traffic shall be maintained through the work area and protected in accordance with the Manual of Uniform Traffic Control Devices (MUTCD), latest edition.

The Contractor shall provide, erect and maintain all traffic control signs and devices, and traffic control for the occupied work areas in accordance with the requirements contained in these specifications and shall take all necessary precautions for the

protection of the work and the safety of the public. Traffic control devices shall conform to the current Manual on Uniform Traffic Control Devices (MUTCD), Part VI published by the US Department of Transportation, Federal Highway Administration. All traffic control devices, i.e. (Drums, cones, tubular markers, barricades, etc.) shall be required to have class "B" reflective sheeting or battery operated flashing warning lights. All signs and traffic control devices remain the property and responsibility of the Contractor. Work shall not be initiated until traffic control devices are in place at the work site.

Traffic control devices shall be covered or removed from the roadway when work is not taking place.

When not in use, equipment shall be parked no closer than 30 feet from the edge of the roadway. Vehicles and machinery not currently used in the work shall be parked off the right-of-way at approved locations to minimize interference with the normal use of the highway. Equipment shall be the responsibility of the Contractor.

The cost of furnishing, installing, and maintaining signs, cones, or other traffic control devices and personnel will be incidental to the unit price. No payment will be made for standby or downtime.

CONSTRUCTION REQUIREMENTS: (Please refer to Section 107.19)

The work shall include furnishing all labor, equipment, supplies, tools, and materials required to effectively remove the existing fence and install type 3-B-1(39) fence along the I-84 ROW at the designated locations.

Temporary fence will be required. Temporary fence shall be installed, maintained and removed at no additional cost to the state, temporary fence will be considered incidental to the 610-030A FENCE 3-B-1 (39) item.

Temporary fence shall be approved by the Engineer prior to removal of the existing fence.

The contractor shall contact all adjacent property owners prior to the removal of the existing fence.

In addition too the work outlined in this document, the contract requires the Contractor or representative to confer on a daily basis with the District 4 Maintenance Coordinator or his designated representative, concerning work units, scheduling, and any problems or concerns that may arise. The District 4 Maintenance Engineer and his representatives are as follows:

District 4 Maintenance Coordinator	Lytle Gaskill	(208) 886-7808
District 4 Maintenance Foreman	Mike Ellis	(208) 436-4330
District 4 Maintenance Lead-Worker	Tony Rigby	(208) 645-2510

The Engineer will answer all questions which may arise as to the quality and acceptability of work performed.

All materials permanently incorporated into the project shall meet the appropriate requirements as listed in the 700 section of the 2004 Standard Specifications for Highway Construction.

The Contractor shall observe and comply with all applicable laws, ordinances, regulations, orders, and decrees; and shall protect and indemnify the State and its representatives against any claim or liability arising from or based on the violation of any such law, ordinance, regulation, order, or decree, whether by himself, his employees, or his subcontractors.

203-075A FENCE REMOVAL

Method of Measurement: The work will be measured by the LINEAR FOOT, measured to the nearest FOOT.

Basis of Payment: Payment for accepted work will be made as follows.

Pay Item	Pay Unit
203-075A	LF

610-030A FENCE TYPE 3-B-1 (39)

Method of Measurement: The work will be measured by the LINEAR FOOT, measured to the nearest FOOT.

Basis of Payment: Payment for accepted work will be made as follows.

Pay Item	Pay Unit
610-030A	LF

610-250A BRACES

Method of Measurement: The work will be measured by the EACH, complete in place

Basis of Payment: Payment for accepted work will be made as follows.

Pay Item	Pay Unit
610-250A	EA

III. PROPOSAL GUIDELINES

1. Pre-proposal Conference

Oral explanations, instructions and interpretations given to bidders prior to award of contract will not be binding. It is the Department's intent to provide all bidders equal opportunity to access and acquire all available pertinent information necessary to formulate a responsive bid. Any information, specifications, plans, data or interpretations which the Department discovers is lacking and may be important to all bidders, will be furnished to all bidders in the form of an addendum, the receipt of which shall be acknowledged.

2. Performance

Submission of a bid by any Contractor shall be accepted as prima facie evidence that they have satisfied themselves as to the nature and location of the work and all other matters, which can in any way affect the work or cost thereof under the contract. Any failure of the Contractor to acquaint them with all available information, including a physical survey of the site of the proposed work, shall not relieve them from successfully performing all the work required.

3. Bidding Requirements and Conditions

Sealed Bids will be received at the time and place stated on the Signature Page. Timely receipt of Bids will be determined by the date and time the Bid is received at the address specified. Hand delivery is encouraged to ensure timely receipt. No proposals will be accepted after the time indicated. All material that is submitted in accordance with this solicitation becomes the property of the State of Idaho and will not be returned.

The bidder shall submit their bid proposal upon the forms furnished by the Department. In the bid schedule, the bidder shall specify a unit price in figures for each pay item for which a quantity is given and show the products of the respective unit prices and quantities written in figures in the column "Amount Bid," and the total amount of the bid obtained by adding the amounts of the several items. In the event of a discrepancy between unit bid prices and extensions, the unit bid price shall govern. All figures shall be written in ink or typed. Penciled entries will not be accepted. If entries are in pencil, the bid proposal shall be considered irregular and the bid will be rejected.

The bidder's proposal shall be signed with ink by the individual, by one or more members of the partnership, by one or more members or officers of each firm representing a joint venture, by one or more officers of a corporation, or by an agent of the bidder legally qualified and acceptable to the State. If the proposal is made by an individual, their name and post office address shall be shown; by a partnership, the name and post office address of each partner shall be shown; as a joint venture, the name and post office address of each member or officer of the firms represented by the joint venture shall be shown; by a corporation, the name of the corporation and the business address of its corporate officials shall be shown.

4. Irregular Proposals

Proposals will be considered non-responsive and shall be rejected for the following reasons:

1. If the Bid Proposal Form(s) are on a form other than that furnished by the State or if the form is altered or any part thereof is detached.

2. If there are unauthorized additions, conditional or alternate bids, omission of addenda, or irregularities of any kind, which tend to make the proposal incomplete, indefinite, or ambiguous as to its meaning.

3. If the bidder adds any provisions reserving the right to accept or reject an award, or to enter into a contract pursuant to an award.

4. If the Bid Schedule does not contain a unit price for each pay item listed except in the case of alternate pay items.

5. If the Bid Documents are not sealed, when received by the Department.

6. If the Signature Page is not signed in Ink.

7. If Addendums are not signed and returned with the Bid Documents.

8. If the required Public Works License Number(s) is not inserted on the Signature Page.

5. Proposal Guaranty / Surety Bond Requirements

No proposal will be considered unless accompanied by a guaranty of the character and in an amount not less than the amount indicated on the Request for Quotation.

If a surety bond is used, it shall be submitted on an acceptable form signed by the bidder and their surety company. Power of Attorney for the person who executes the bond on behalf of the surety as Attorney-In-Fact must accompany the proposal bond.

The lowest responsive bidder shall furnish a performance bond and a payment bond each in the amount of the contract.

The lowest responsive bidder may deposit government obligations in lieu of performance and payment bonds under the following conditions:

1. The obligations shall be acceptable to the State Treasurer.

2. The obligations shall be payable to, or fully negotiable by, the Department.

3. The obligation shall be in an amount equal at fair market value to the penal sum of the required surety bonds.

4. The bidder pays the initial and return transfer charges for transmittal of the obligation of the Treasurer's Office.

Within **90 days** after final acceptance for the project those obligations deposited, as a performance bond will be returned, less any amount owed to the Department as a result of this contract. Obligations deposited, as the payment bond shall be held for a period of one year from the date of acceptance of the project for settlement of claims in accordance with Idaho Code, Section 54-1927.

Government obligations shall be deposited with the State Treasurer with instructions to issue a safe keeping receipt to the Department.

6. Disqualification of Bidders

Any of the following reasons may be considered as being sufficient for the disqualification of a bidder and the rejection of their proposal or proposals:

1. More than one proposal, for the same work from an individual, partnership or corporation under the same name or a different name.

2. Evidence of collusion among bidders. Participants in such collusion will receive no recognition as bidders for any future work of the State until any such participant shall have been reinstated as a qualified bidder.

7. Consideration of Proposals

After the proposals are opened and read, they will be compared on the basis of the summation of the products of the approximate quantities shown in the bid schedule by the unit bid prices. The results of such comparisons will be available at http://itd.idaho.gov/business/business.htm.

The right is reserved to reject any or all proposals, to waive technicalities, to advertise for new proposals, or to proceed to do the work otherwise, if, in the judgment of the Department, it is in the best interest of the State.

8. Execution / Award of the Contract

The award of contract, if it is awarded, will be made within **15 calendar days** after the Intent to Award Notice letter has been mailed to the lowest responsive bidder whose proposal complies with all requirements prescribed.

However, the award may be deferred beyond **15 calendar days** by mutual written agreement between the Department and the lowest responsive bidder.

The contract shall be signed by the lowest responsive responsible bidder and returned together with the Surety bonds, **within 15 calendar days** after the bidder has received the contract. If the contract is not executed by the State within **15 calendar days** following receipt from the bidder of the signed contracts and bonds, the bidder shall have the right to withdraw their bid without penalty. No contract shall be considered as effective until it has been fully executed by all of the parties thereto.

9. Failure to Execute Contract

Failure to execute the contract and file acceptable bonds within **15 calendar days**, after the contract has been received by the bidder, shall be just cause for the cancellation of the award of contract and the forfeiture of the proposal guaranty which shall become the property of the State, not as a penalty, but in liquidation of damages sustained. Award may then be made to the next lowest responsible bidder or the work may be re-advertised or otherwise, as the Department may decide.

10. Return of Proposal Guaranty

Proposal guaranties, except those of the two lowest responsive bidders, will be returned immediately following the opening and checking of the proposals. The retained proposal guaranty of the unsuccessful of the two lowest responsive bidders will be returned within 10 days following the award of contract and that of the successful bidder will be returned after satisfactory Surety bonds have been furnished and the contract has been executed.

TERMS AND CONDITIONS

1. Contract Term

Contract term is non-renewable. Work shall not commence before July 1, 2006. All work shall be completed in forty (40) working days.

2. Payment Requirements

Payments will be made as provided: Upon satisfactory completion of services specified herein, the Contractor will be paid monthly as soon as possible after receipt of invoices. Payments otherwise due may be withheld on account of substandard or defective work not remedied.

3. Changes

The Department reserves the right to revise the "Work Locations and Schedule" and to make other changes within the general Scope of Work as may be deemed necessary to best serve the interests of the Department. Changes in compensation, which may result from such revisions, shall be documented by formal Change Order to the contract and approved by the Purchasing Agent.

4. Claims for Adjustment and Disputes

If the Contractor believes that additional compensation is due them for work or material not clearly covered in the contract, or not ordered as extra work, as defined herein, they shall prosecute their claim in the following manner.

Prior to doing the work on which they believe additional compensation is due them, the Contractor shall notify the ITD Purchasing Agent in writing of their intent to file a claim. If such notification is not given, then the Contractor shall thereby waive their right to any claim for such additional compensation.

At a minimum, the detailed letter shall include a narration of events, citing of entitlement and a showing of the amount of compensation and/or adjustment of time believed due. Full documentation for all elements in the letter shall be included. The claim will be considered and a determination made. The Purchasing Agent will notify the Contractor in writing of the decision.

The decision will be final and conclusive unless, within thirty (30) days from receipt of the Purchasing Agent's letter, the Contractor submits an appeal in writing to the Purchasing Agent. All pertinent information, references, arguments and data to support the claim shall be included. The Purchasing Agent will review the claim and the Contractor will be notified by mail. This decision will be final and conclusive.

In connection with any appeal proceeding under this subsection, the Contractor will be afforded an opportunity to be heard and offer evidence in support of their claim at any level of review. Pending final decision of a dispute hereunder the Contractor shall proceed diligently with performance of the contract.

5. Compliance

If the Department registers a formal and written compliant with the Contractor in respect to undesirable or unsanitary conditions, the Contractor will have 72 hours in which to respond in person to the complaint, to the project Coordinator to remedy the problem(s). Failure to respond in the prescribed time to the complaint or to remedy the problem may result in termination of the contract as provided in Section 16 TERMINATION.

If the Department is not satisfied with the results and remediation of the complaint, the project coordinator may require periodic and joint inspections of the area with the Contractor to discuss and point out Contractors violations. Failure of the Contractor to attend these inspections may result in termination of the contract.

6. Termination For Default

Should the Contractor neglect to prosecute the work properly, or fails to perform any provision of the contract, the Department, after seven (7) days from written notice to the Contractor, may without prejudice to any other remedy they may have, make good the deficiencies and may deduct the cost thereof from the payment then or thereafter due to the Contractor or, at its option, may terminate the contract and take possession of all materials, tools, fixtures and furnish the work by such means as the Department sees fit, and if the unpaid balance of the contract price exceeds the expense of finishing the work, such excess shall be paid to the Contractor, but if such expense exceeds such unpaid balance, the Contractor's surety shall pay the difference to the Department.

7. Termination For Convenience

A. The DEPARTMENT or CONTRACTOR may cancel this Contract at any time with or without cause upon thirty (30) days' written notice to the other party, and specifying the date of termination.

B. Cancellation of the Contract by either party shall terminate the obligations or liabilities of the parties, except that the obligations or liabilities incurred prior to the termination date shall be honored.

8. Indemnification

The Contractor shall indemnify, save harmless, and defend regardless of outcome, the State from the expenses of and against all suits, actions, claims, or costs, expenses, and attorney fees that may be incurred because of any injuries or damages received or sustained by any person, persons, or property on account of the operations of the Contractor or their subcontractors; or on account of or in consequence of any neglect in safeguarding the work; or through use of unacceptable materials in the work; or because of any act or omission, neglect, or misconduct of the Contractor or their subcontractors; or because of any claims or amounts recovered from any infringements of patent, trademark, or copyright; or from any claims or amounts arising or recovered under the Worker's Compensation Act or any other law, ordinance, order or decree.

9. Insurance Requirements

The Contractor shall carry such public liability and property damage insurance that will protect them and the State of Idaho from claims for damages for bodily injury, including accidental death, as well as for claims for property damages, which may arise from operations under the contract whether such operations be by themselves or by any subcontractor or by anyone directly or indirectly employed by either of them. The following is a brief explanation of the required insurance coverage's. A certificate of insurance will be required of the contractor selected.

1) Worker's Compensation. The CONTRACTOR, its subcontractor(s), if any, and all employers providing work, labor or materials under this contract, are subject employers under the Idaho Worker's Compensation Law, and shall comply with Idaho Statutes regarding Worker's Compensation.

For the duration of this Contract, and until all work specified herein is complete, the CONTRACTOR, its subcontractor(s), if any, and all employers providing work, labor or materials under this contract, shall provide Idaho Worker's Compensation coverage that satisfies Idaho law for all their subject workers.

The CONTRACTOR must have a valid Worker's Compensation insurance policy in effect prior to the Division of Purchasing generating the contract. The CONTRACTOR must show proof of such coverage by presenting to the Division of Purchasing a valid certificate of insurance showing statutory coverage.

The CONTRACTOR must provide either a Certificate of Idaho Workers' Compensation Insurance issued by a surety licensed to write Idaho Workers' Compensation Insurance in the State of Idaho, as evidence that the CONTRACTOR has in effect a current Idaho Workers' Compensation Insurance policy, or an extraterritorial certificate approved by the Idaho Industrial Commission from a State that has a current reciprocity agreement with the Industrial Commission.

2) Employer's Liability. This coverage is written in conjunction with Worker's Compensation and provides insurance for the employer's liability to its employees in circumstances where the injury is not covered by the Worker's Compensation law and the employer may be subject to common law liability. Employer's liability insurance shall be a minimum amount of $100,000 per occurrence.

3) Liability Insurance. For the duration of the Contract and until all work specified in the Contract is completed, the CONTRACTOR shall have and maintain, at CONTRACTOR'S expense, the liability insurance set forth below and shall comply with all limits, terms and conditions of such insurance. Work under this Contract shall not commence until evidence of all required insurance is provided to the Division of Purchasing. Evidence of insurance shall consist of a completed certificate of insurance signed by the insurance agent for the CONTRACTOR and made a part of this Contract.

4) The Contractor shall not commence work under the contract until he obtains all insurance required under this provision and furnishes a certificate or other form showing proof of current coverage to the State and to the railroad or railway company, when involved. All insurance policies and certificates must be signed copies. After work commences, the Contractor will keep in force all required insurance until written acceptance of the project.

Required Insurance:

1. Commercial General Liability Insurance. The CONTRACTOR shall have and maintain Commercial General Liability (CGL) Insurance covering bodily injury and property damage. This insurance shall include personal injury liability coverage; blanket contractual liability coverage for the indemnity provided under this Contract and products/completed operations liability. The combined single limit per occurrence shall not be less than $1,000,000 or the equivalent. Each annual aggregate limit shall not be less than $1,000,000, when applicable, and will be endorsed to apply separately to each job site or location.

2. Automobile Liability Insurance

   The Contractor shall obtain, at the Contractor's expense, and keep in effect during the entire term of the contract, Automobile Liability Insurance covering owned, non-owned and hired vehicles. This coverage may be written in combination with Commercial General Liability Insurance. Combined single limit per occurrence shall not be less than $1,000,000.

Additional requirements:

State of Idaho as Additional Insured. The liability insurance coverage required for performance of the Contract shall include the State of Idaho, the Idaho Transportation Department and its division, officers and employees as additional insured, but only with respect to the CONTRACTOR'S activities to be performed under this Contract.

Notice of Cancellation or Change. The CONTRACTOR shall ensure that all policies of insurance are endorsed to read that there shall be no cancellation, material change, potential exhaustion of aggregate limits or intent not to renew insurance coverage(s) without sixty (60) days prior written notice from the CONTRACTOR or its insurer to the Idaho Transportation Department. CONTRACTOR shall further ensure that all policies of insurance are endorsed to read that any failure to comply with the reporting provisions of this insurance, except for the potential exhaustion of aggregate limits, shall not affect the coverage(s) provided to the State of Idaho, Transportation Department and its divisions, officers and employees.

10. TITLE VI ASSURANCES

I. APPLICATION

These contract provisions shall apply to all work performed on the contract by the contractor with his own organization and with the assistance of workmen under his immediate superintendence and to all work performed on the contract by piece work, station work or by subcontract.

II. EMPLOYMENT LISTS, LABOR SELECTION, NON-DISCRIMINATION

A local public employment agency has been designated by the State to prepare the employment lists for the project.

All qualified unskilled labor shall be employed insofar as possible from lists furnished the contractor by the employment agency designated in the contract. The contractor may avail himself of the services of the employment agency for obtaining labor of the intermediate and skilled grade.

In the performance of this contract, within the limitations of Subsection 107.01 requiring employment of up to 95% Idaho residents, preference in employment shall be given to qualified honorably discharged Veterans of the United States Armed Forces.

During the performance of this contract, the contractor, for itself, its assignees and successors in interest (hereinafter referred to as the "Contractor"), agrees as follows:

1. Compliance with Regulations:
   The Contractor shall comply with the Regulations relative to nondiscrimination in federally assisted programs of the U.S. Department of Transportation, Title 49, Code of Federal Regulations, Part 21, as they may be amended from time to time, (hereinafter referred to as the "Regulations"), which are herein incorporated by reference and made a part of this contract.

2. Nondiscrimination:
   The Contractor, with regard to the work performed during the contract, shall not discriminate on the grounds of race, color, religion, sex or national origin in the selection and retention of subcontractors, including procurement of materials and leases of equipment. The Contractor shall not participate either directly or indirectly in the discrimination prohibited by section 21.5 of the Regulations, including employment practices when the contract covers a program set forth in Appendix B of the Regulations.

3. Solicitations for Subcontracts, Including Procurements of Materials and Equipment:
   In all solicitations, either by competitive bidding or negotiation made by the Contractor for work to be performed under a subcontract, including procurement of materials or leases of equipment, each potential subcontractor or supplier shall be notified by the Contractor, of the Contractor's obligations of this contract and Regulations relative to nondiscrimination on the grounds of race, color, religion, sex, or national origin.

4. Information and Reports:

The Contractor shall provide all information and reports required by Regulations and/or Directives issued pursuant thereto and shall permit access to its books, records, accounts, other sources of information, and its facilities as may be determined by the state of Idaho Transportation Department or the Federal Highway Administration to be pertinent to ascertain compliance with such Regulations or directives. Where any information required of a Contractor is in the exclusive possession of another who fails or refuses to furnish this information, the Contractor shall so certify to the state of Idaho Transportation Department or the Federal Highway Administration as appropriate, and shall set forth what efforts it has made to obtain the information.

5. Sanctions for Noncompliance:

In the event the Contractor is in noncompliance with the nondiscrimination provision of this contract, the state of Idaho Transportation Department shall impose such contract sanctions as it or the Federal Highway Administration may determine to be appropriate, including, but not limited to:

a. Withhold progress payments until it is determined that the contractor is found in compliance;

b. Suspend the contract, in whole or in part, until the contractor or subcontractor is found to be in compliance with no progress payment being made during this time and no time extension made;

c. Cancel or terminate the contract for cause;

d. Assess against the contractor's final payment on this contract or any progress payments on current or future Idaho projects an administrative remedy by reducing the final payment or future progress payment in an amount equal to 10% of this contract or $7,700, whichever is less.

6. Incorporation of the Provisions:

The Contractor shall include the provisions of paragraphs (1) through (6) in every subcontract, including procurements of materials and leases of equipment, unless exempt by the Regulations, or directives issued pursuant thereto. The Contractor shall take such action with respect to subcontractor or procurement as the state of Idaho Transportation Department or Federal Highway Administration may direct as a means of enforcing the provisions, including sanctions for noncompliance, provided, however, that in the event a Contractor becomes involved in, or is threatened with litigation with a subcontractor or supplier as a result of such direction, the Contractor may request the state of Idaho Transportation Department to enter into such litigation to protect the interests of the State, and in addition, the Contractor may request the United States to enter into such litigation to protect the interests of the United States.

c. LABOR PROVISIONS

The wages of labor shall be paid in legal tender of the United States, except that this condition will be considered satisfied if payment is made by a negotiable check, on a solvent bank, which may be cashed readily by the employee in the local community for the full amount without discount or collection charges of any kind. Where checks are used for payment, the contractor shall make all necessary arrangements for them to be cashed and shall give information regarding such arrangements. No fee of any kind shall be asked or accepted by the contractor or any of his agents from any person as a condition of employment on the project.

No employee shall be charged for any tools used in performing their respective duties except for reasonably avoidable loss or damage thereto.

Every employee on the work covered by this contract shall be permitted to lodge, board and trade where and with whom he elects and neither the contractor nor his agents nor his employees shall directly or indirectly require as a condition of employment that an employee shall lodge, board or trade at a particular place or with a particular person.

No charge shall be made for any transportation furnished by the contractor or his agents to any person employed on the work.

No individual shall be employed as a laborer on this contract except on a wage basis, but this shall not be construed to prohibit the rental of teams' trucks or other equipment from individuals. No such rental agreement or any charges for feed, gasoline, supplies or repairs on account of such agreement, shall cause any deduction from the wages accruing to any employee except as authorized by the regulations hereinbefore cited.

Requisition # D-004630
Project: Stage 2 – Interstate
Fence Replacement

INTENTION TO RESPOND

No Fax Cover Sheet Is Required

FAX BACK: 208 334-8824

Your assistance is requested. Please fax back immediately.

To: Idaho Transportation Department
Purchasing Section
PO Box 7129
Boise, Idaho 83707-1129

BID CLOSES ON: 5/10/06 @ 5:00 P.M. BID OPENS ON: 5/11/06 @ 10:00 A.M.

Please check all that apply

_____ Company intends to prepare and submit a proposal to the requisition listed above.

_____ Company does not plan to respond.

_____ Other Message/Comments: _____

_____

_____

Company Name _____

Individual/Owner's Name _____

Mailing Address _____

City_____ State_____ Zip_____

Contact Person _____
(Please Print)

Phone # _____ Fax # _____

BID SCHEDULE

Each Bid item shall be filled in completely by the Contractor in the bid schedule, by indicating total dollars and cents under Price / Unit and Total Cost Bid.

All costs, including hourly rates, will be included here and will be fully burdened to include, but not limited to, wages, transportation, lodging, overhead, and per-diem. All figures shall be written in ink or typed. Penciled entries will not be accepted; bids will be considered irregular and rejected.

REQUISITION # D-004630
STAGE 2

CONTRACTOR/BUSINESS NAME: _____

Item No.	Item Description	Approx. Quantity	Unit Price	Bid Amount
203-075A	**Remove Fence**	**35,112 LF**		
610-030A	**Fence, 3-B-1 (39)**	**35,112 LF**		
610-250A	**Braces**	**106 EA**		

TOTAL BID $_____

**** Quantities are approximate and for bidding purposes only***

AWARD TO BE "ALL OR NONE"

This page must be returned with your bid

IDAHO TRANSPORTATION DEPARTMENT
SIGNATURE PAGE

THIS PAGE MUST BE SIGNED WITH AN ORIGINAL SIGNATURE AND RETURNED WITH YOUR BID DOCUMENTS!!!

April 18, 2006

Idaho Transportation Department
Supply Services Purchasing Section
3311 West State Street
Boise, Idaho 83703

REQUISITION #: D-004630
STAGE 2

The Idaho Transportation Department is seeking qualified bidders to furnish all labor, equipment, supplies, tools and materials required to effectively remove the existing fence and install TYPE 3-B-1(39) Fence along I-84 at various designated locations.

PUBLIC WORKS CONTRACTORS LICENSE #

_____

FEDERAL IDENTIFICATION #

_____

Company Name: _____

Mailing Address: _____

City: _____ State: _____ Zip: _____

Phone: _____ Fax: _____

Contractors Signature/Authorized Signature:

_____

_____

Printed Signature

BY SIGNING, BIDDER ACKNOWLEDGES ITS RESPONSIBILITY FOR ANY ADDENDA THAT HAVE BEEN ISSUED FOR THIS SOLICITATION AND WILL COMPLY WITH ALL THE TERMS, CONDITIONS, AND SPECIFICATIONS OF THIS SOLICITATION.

THIS PAGE MUST BE SIGNED, WITH AN ORIGINAL SIGNATURE, AND RETURNED WITH YOUR BID DOCUMENTS!

B I D P R O P O S A L

TO: IDAHO TRANSPORTATION BOARD
Idaho Transportation Department
Division of Highways

In compliance with your invitation for bids to be received: **May 10, 2006 @ 5:00 P.M., and Opened on May 11, 2006 @ 10:00 A.M.** The undersigned certifies they have examined the location of work and/or materials sites, and has satisfied themselves as to the condition to be encountered, and that the plans, specifications, contract and method of payment for such work is understood. The undersigned hereby agrees to furnish all **labor, equipment, supplies, tools and materials required to effectively remove the existing fence and install TYPE 3-B-1(39) FENCE along I-84 at designated locations** as directed at the designated areas, as per the specifications contained in Requisition Number D-004630 – STAGE 2

On the acceptance of this bid for said work the undersigned will furnish the 100% Contract Performance and Payment Bonds with approved and sufficient surety within 10 days after the contract is presented for signature.

Accompanying this bid proposal is a Bid Bond or Cashier's Check in the amount of five percent (5%) of the total amount bid.

The bidder furthers agrees that if awarded the contract, work will be completed within **forty (40) working days** after authority to proceed has been given. In conformity with and subject to such extensions as may be authorized by the terms of “Determination and Extension of Contract Time,” Subsection 108.06 of the said Standard Specifications

By signing this bid proposal (P-3, A, B or C), the bidder being duly sworn states that the firm, association or corporation to whom this contract is to be awarded has not by or through any of its officers, partners, owners or any other person associated therewith, either directly or indirectly, entered into any agreement, participated in any collusion, or otherwise taken any action in restraint of free competitive bidding in connection with this highway project, and is not financially interested in or otherwise affiliated in a business way with any other bidder on this project.

B I D D E R 'S S I G N A T U R E S R E Q U I R E D

TO BE EXECUTED BY **C O R P O R A T E** CONTRACTORS

Date _____, 2006

Name, Address and Phone Number of
Corporation: _____

_____

_____
Phone Number

Idaho Public Works Contractors License Number _____

Incorporated under the laws of the State of _____

Name & Address of President _____

Name & Address of Secretary _____

Name & Address of Treasurer _____

SIGNATURE

_____
President, Vice President, etc…

State of _____, County of _____ss

On this _____ day of _____, in the year _____, before

me _____, personally appeared _____,
(Notary Public)
known or identified to me to be the President or Vice President or Secretary or Assistant Secretary, of the corporation that executed the instrument or the person who executed the instrument on behalf of said corporation, and acknowledged to me that such corporation executed the same.

_____

Notary Public for _____

Residing at _____

My Commission Expires on:

_____

P-3-A
Page 2 of 2

B I D D E R 'S S I G N A T U R E S R E Q U I R E D

TO BE EXECUTED BY **P A R T N E R S H I P**

Date _____, 2006

Name, Address and Phone Number of Bidder:

_____

_____

_____
Phone Number

Idaho Public Works Contractors License Number_____

SIGNATURE:

_____ _____
(Name & Title, as "Partner") Address

_____ _____
(Name & Title, as "Partner") Address

_____ _____
(Name & Title, as "Partner") Address

THIS MUST BE SIGNED BY AT LEAST ONE GENERAL PARTNER

State of _____, County of _____ss

On this _____ day of _____, in the year _____,

before me _____, personally appeared
(Notary Public)
_____, known or identified to me to be one

of the partners in the partnership of _____
(Partnership Name Signed to Instrument)

and the partner or one of the partners who subscribed said partnership name to the foregoing

instrument, and acknowledged to me that they executed the same in said partnership name.

_____

Notary Public For _____

Residing at _____

My Commission Expires on:

_____

P-3-B
Page 2 of 2

B I D D E R 'S S I G N A T U R E S R E Q U I R E D

TO BE EXECUTED BY **SOLE PROPRIETOR**

Date _____, 2006

Name, Address and Phone Number of Bidder:

_____

_____

_____
Phone Number

Idaho Public Works Contractors License Number_____

SIGNATURE:

_____ _____
(Name & Title, as "Owner") Address

_____ _____
(Name & Title, as "Owner") Address

State of _____. County of _____ss

On this _____ day of _____, in the year _____,

before me _____, personally appeared
(Notary Public)

_____, known or identified to me to be the

person whose name is subscribed to the within instrument, and acknowledged to me that

_____ executed the same.
(he/she/they)

_____

Notary Public For _____

Residing at _____

My Commission Expires on:

_____

P-3-C
Page 2 of 2

DOMICILE

PREFERENCE FOR IDAHO DOMICILED CONTRACTORS ON PUBLIC WORKS (Idaho Code 67-2348 - Effective July 1, 1982). To the extent permitted by federal laws and regulations, whenever the State of Idaho, or any department, division, bureau or agency thereof, or any city, county, school district, irrigation district, drainage district, sewer district, highway district, good road district, fire district, flood district, or other public body, shall let for bid any contract for bid any contract to a contractor for any public works, the contractor domiciled outside the boundaries of Idaho shall be required, in order to be successful, to submit a bid the same percent less than the lowest bid submitted by a responsible contractor domiciled in Idaho as would be required for such an Idaho domiciled contractor to succeed over the bidding contractor domiciled outside Idaho on a like contract being let in his domiciliary state.

If the bidder is unsure of where their business is domiciled, the following "rule of thumb" may help!

1) Corporation: Domiciled where chartered.

2) Sole Proprietor: Domiciled where permanent headquarters of business located.

3) Partnership: Domiciled where permanent headquarters of business located.

COMPANY NAME: _____

STATE OF DOMICILE: _____

NOTE: THIS PAGE MUST BE RETURNED WITH YOUR BID!!!!

SUBCONTRACT REQUIREMENTS

PLUMBING, ELECTRICAL, HEATING & AIR-CONDITIONING WORK ONLY

1. If the contractor intends to subcontract plumbing, heating, air-conditioning or electrical work, they must complete this form, giving the name, address, and Public Works Contractors License Number, for any and all Subcontractors who shall, in the event the Contractor secures the contract and subcontracts the plumbing, electrical, heating or air-conditioning work under the contract. Failure to complete this form as required shall render any such bid submitted by a contractor non-responsive and void.

2. Contractors not intending to subcontract any such work named in the preceding paragraph shall leave the appropriate spaces below blank or indicated by writing in the "work shall be" **none.**

3. Subcontractors named in accordance with the provisions of Paragraph 1 must possess an appropriate Idaho Public Works Contractors License issued by the State of Idaho Public Works Contractors State License Board covering the contract work classification in which the subcontractors is named.

4. The following are the names, addresses, and Public Works Contractors License Numbers, who shall do the following designated specialty, work under the prime and/or general contract should I/we be award the prime or general contract:

   a. Subcontractor for the **Plumbing** work shall be:

   _____, Residing at

   _____, Whose Idaho Public Works

   Contractor's License # is _____

   b. Subcontractor for the **Electrical** work shall be:

   _____, Residing at

   _____, Whose Idaho Public Works

   Contractor's License # is _____

   c. Subcontractor for the **HVAC** work shall be:

   _____, Residing at

   _____, Whose Idaho Public Works

   Contractor's License # is _____

NOTE: THIS PAGE MUST BE RETURNED WITH YOUR BID DOCUMENTS!

CONTRACTOR'S AFFIDAVIT

CONCERNING ALCOHOL AND DRUG-FREE WORKPLACE

STATE OF _____

COUNTY OF _____

The undersigned being duly sworn upon oath, deposes and says that

_____ complies with the provisions of Section 72-1717 Idaho
(Contractor Name)

Code (Drug Free Workplace program); that _____ provides a
(Contractor Name)

drug-free workplace program that complies with the provisions of Idaho Code, title 72,

chapter 17 and will maintain such program throughout the life of a state construction contract

and that _____ shall subcontract work only to subcontractors meeting
(Contractor Name)

the requirements of Idaho Code, section 72-1717(1)(a).

_____
Name of Contractor

_____
Address

_____
City and State

By: _____
(Signature)

Subscribed and sworn to before me this _____ day of _____,
_____.

Commission expires:

_____
NOTARY PUBLIC, residing at

_____

_____

THIS PAGE MUST BE RETURNED WITH YOUR BID DOCUMENTS

REVISED 3/06

BIDDERS RESPONSIBILITY PAGE

PLEASE NOTE: The following documents, IF APPLICABLE TO YOUR BID, must be returned to the Idaho Transportation Department Purchasing Section to allow your bid to be considered.

1.) **Idaho Employer Alcohol and Drug-Free Workplace Act State Construction Contracts - EFFECTIVE: January 1, 2005. Idaho Code, Section 72-1717, the following document is required on ALL State Construction or Improvement of Public Property or Publicly Owned Buildings.**

- **Affidavit of Alcohol and Drug Free Workplace Program**

2.) **"Signature Page"**
- Public Works License Number must be inserted
- Page must be signed with an original signature

3.) Bid Response
- Individual, Partnership, or Corporation
- One of three, depending upon company structure, MUST be completed, signed and notarized

4.) Bidder must complete Bid Schedule

5.) Bidder must complete Domicile Form

6.) Subcontractor form SC-1 – **as required per specifications**

7.) A 5% Bidders Bond or Cashier's Check

8.) **All Addenda** Must be Signed and returned with your Bid Documents.
It is the Bidder's responsibility to verify if an addendum was issued.

9.) **ALL BIDS** must be submitted in a sealed enveloped with the Requisition Number, Bid Open Date, and Project Name clearly marked on the outside of the envelope.

10.) **NO BID ADJUSTMENTS WILL BE ACCEPTED:** Any changes made to a bid must be submitted as a separate bid and all rules remain in effect. ALL REQUIRED paperwork must be re-submitted.

11.) **PUBLIC WORKS LICENSE REQUIRED:** - Public Works Contractors License Board – Phone # (208) 332-8968. http://www2.idaho.gov/dbs

12.) **WORKERS' COMPENSATION INSURANCE:** - Per Idaho Code 72-216. Proof of said insurance must be provided by successful Bidder before Contract(s) are executed. – It shall be the Contractors responsibility to request, each year, a current certificate of insurance is sent to the Agency. Non-Compliance will result in the forfeiture of Contract and all Bonds.

13.) **GENERAL AND AUTOMOBILE LIABILITY INSURANCE:** - Proof of said insurance must be provided by successful Bidder before Contract(s) are executed. Non-Compliance will result in the forfeiture of Awarded Contract and all Bonds.

14.) **CONTRACTORS REGISTRATION:** - Per Idaho Code 54-5204. A copy of the certificate shall be submitted with the signed contracts. Non-Compliance will result in the forfeiture of Awarded Contract and all Bonds.

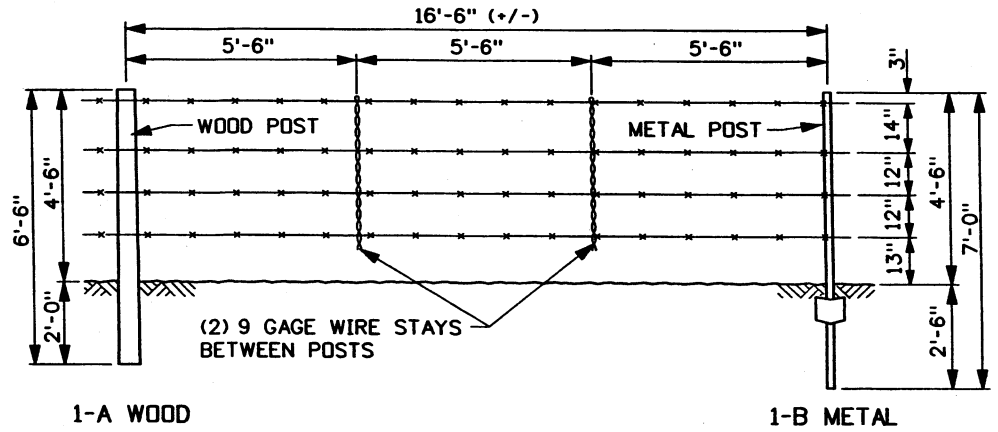

FENCE TYPE 1

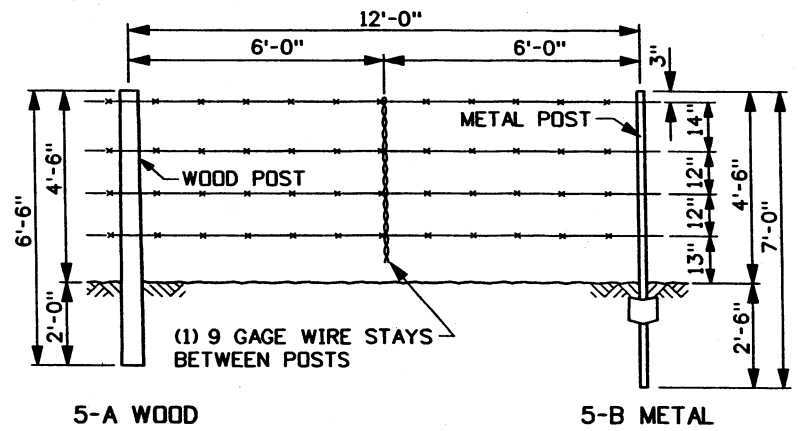

FENCE TYPE 5

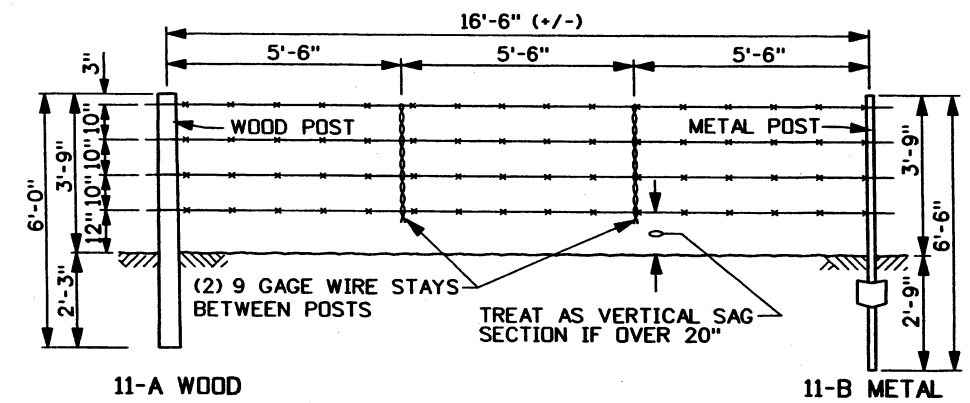

FENCE TYPE 11

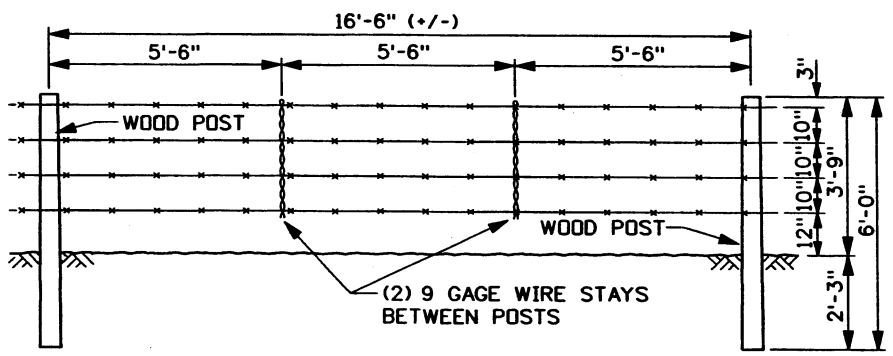

DROP FENCE TYPE 6

(SEE WOOD POST STAPLE DETAIL, SHEET 2 OF 3)

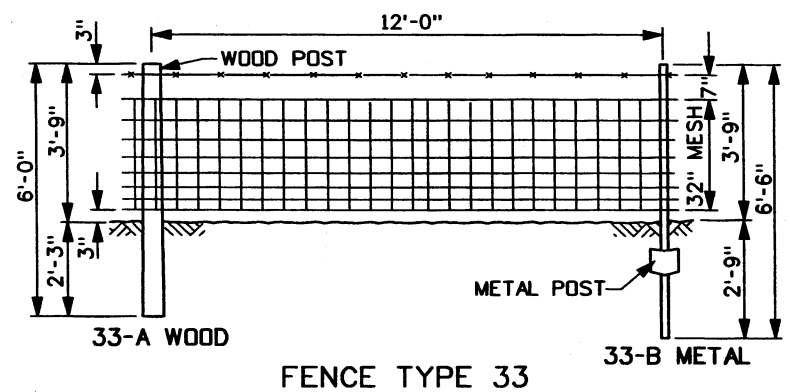

FENCE TYPE 33

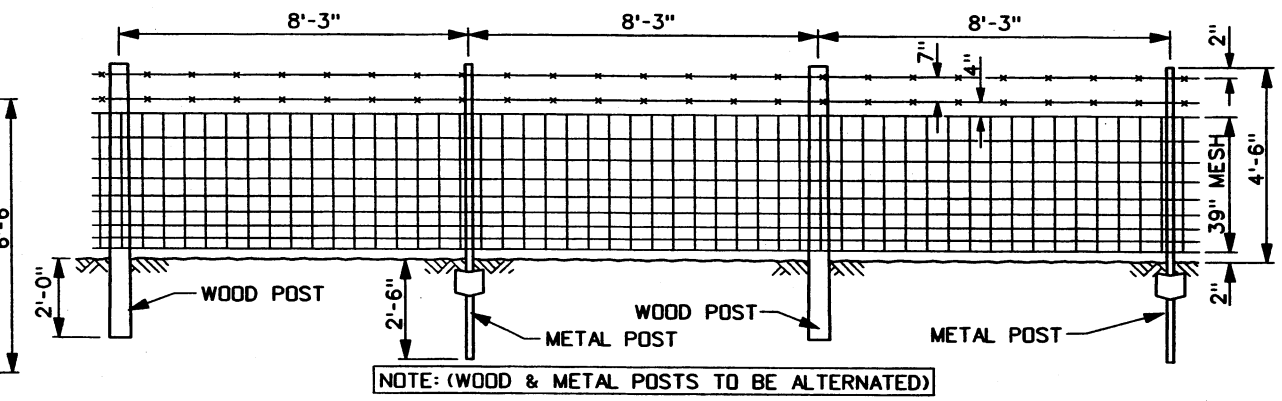

FENCE TYPE 2

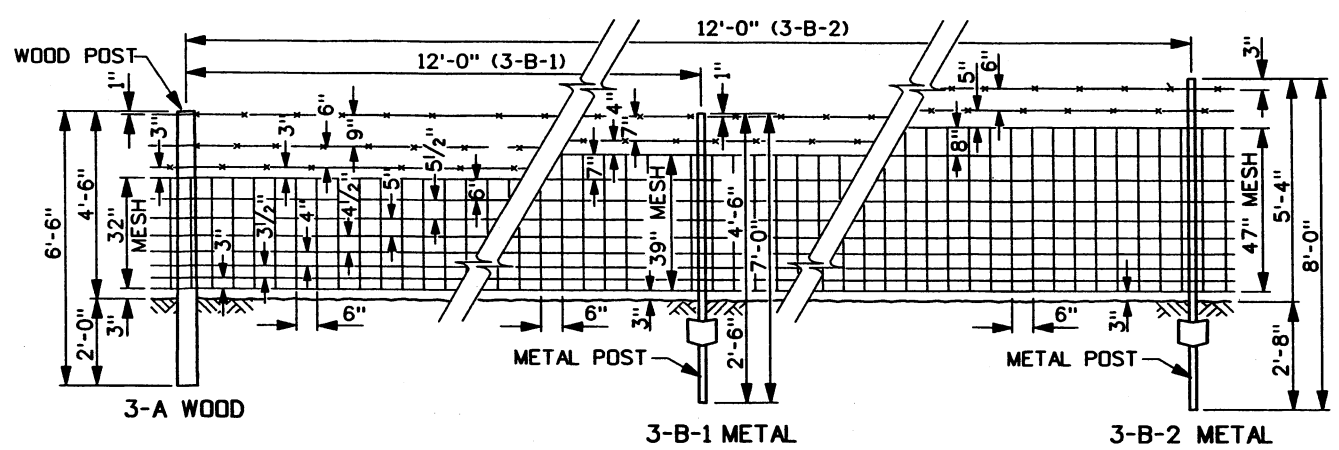

NOTE: FENCE TYPE 3 WILL HAVE THE MESH HT. SHOWN AFTER THE POST MATERIAL SUFFIX i.e., TYPE 3-A (32"), OR TYPE 3-B (39").

FENCE TYPE 3

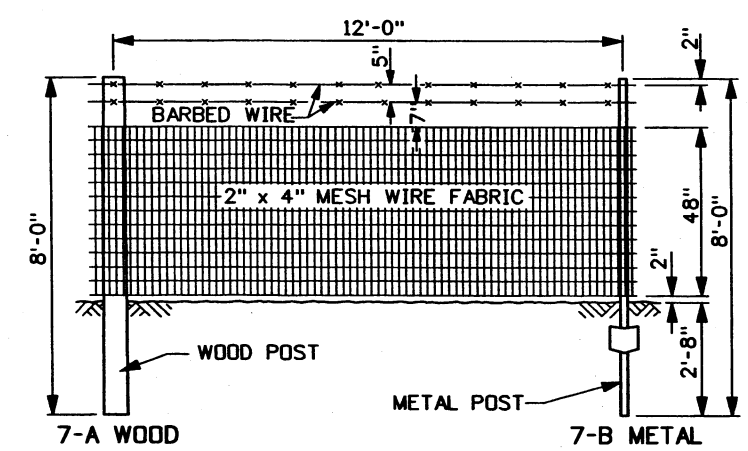

FENCE TYPE 7

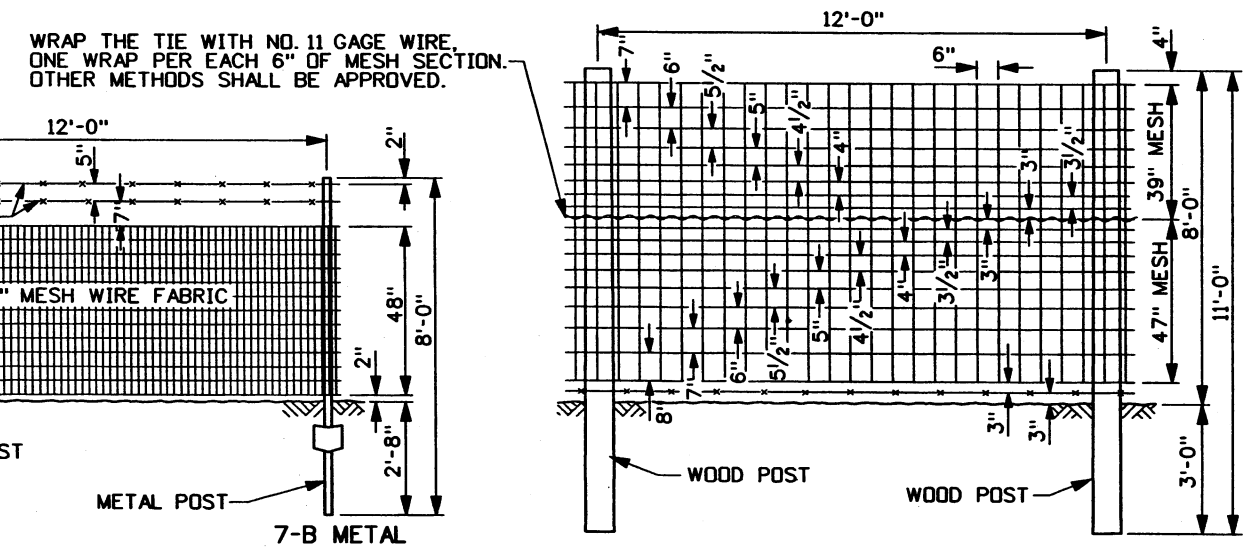

DEER PROOF FENCE TYPE 8

REVISIONS								
NO.	DATE	BY	NO.	DATE	BY	NO.	DATE	BY
1	4-73		6	3-80		11	1-97	MSM
2	12-73		7	7-84		12	11-00	MSM
3	2-74		8	5-90	GB	13	11-01	MSM
4	2-77		9	12-92	MSM	14	5-04	MSM
5	1-78		10	9-93	MSM	15	10-04	MSM

SCALES SHOWN ARE FOR 11" X 17" PRINTS ONLY

CADD FILE NAME f2a_1004.std

DRWG. ORIG. DATE: FEBRUARY, 1973

IDAHO TRANSPORTATION DEPARTMENT

BOISE IDAHO

ASSISTANT CHIEF ENGINEER (DEVELOPMENT)

CHIEF ENGINEER

STANDARD DRAWING

STANDARD BARBED, WOVEN, MESH, COMBINATION WIRE FENCES, & FENCING DETAILS

REQUIRES SHEETS 2 OF 3 & 3 OF 3

English

STANDARD DRWG. NO.

F-2-A

SHEET 1 OF 3

PROFESSIONAL ENGINEER REGISTERED 2240 10/13/04 STATE OF IDAHO MILFORD L. MILLER

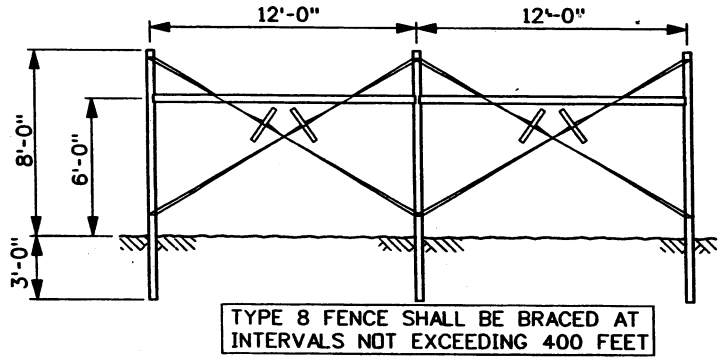

WOOD LINE BRACE FOR TYPE 8 FENCE

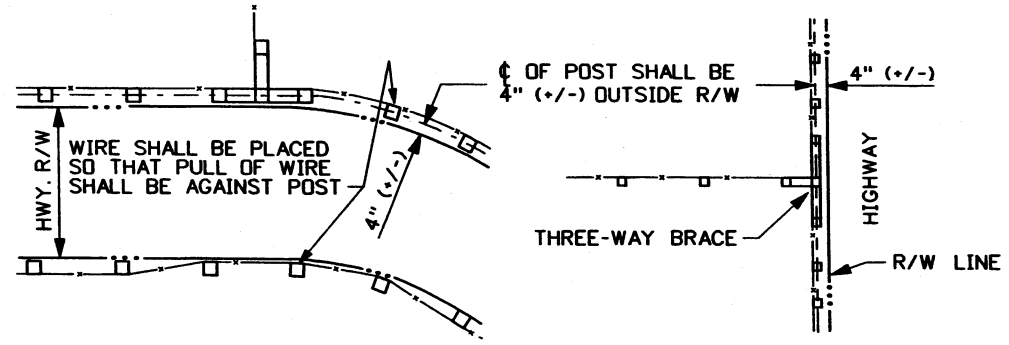

POST & WIRE LOCATION — PLAN - FENCE TERMINAL

STANDARD APPROACH POLICY & PARTIAL CONTROL ACCESS

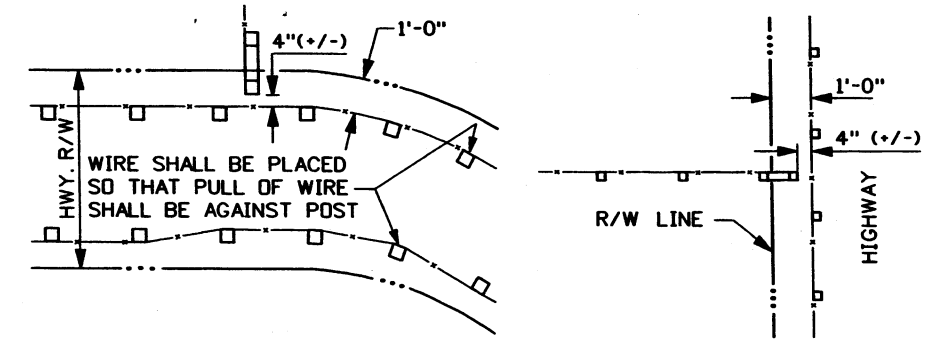

POST & WIRE LOCATION — PLAN - FENCE TERMINAL

FULL CONTROL ACCESS

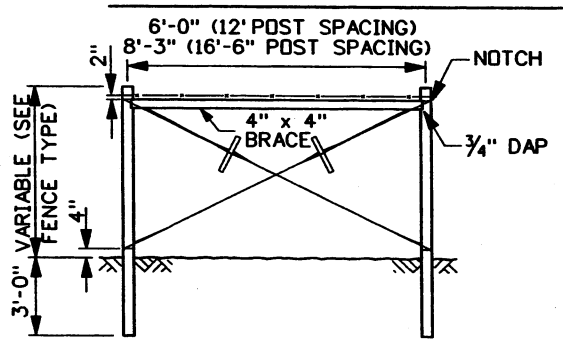

LINE BRACE

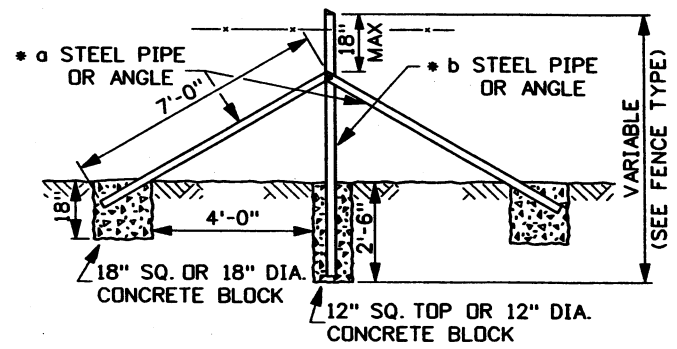

LINE BRACE

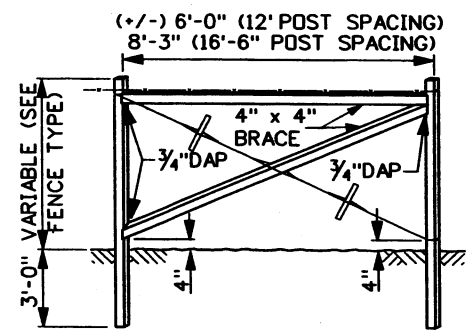

TERMINAL BRACE

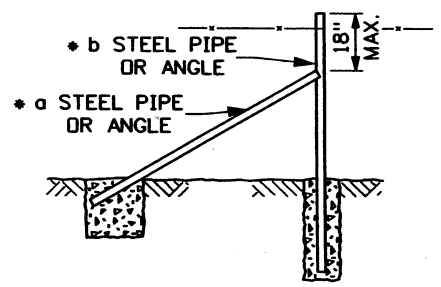

TERMINAL BRACE

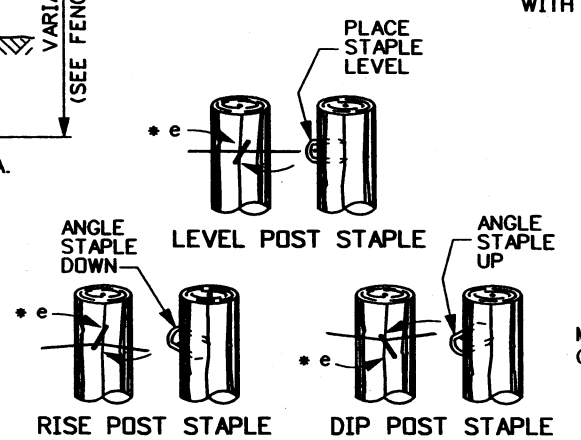

* e ROTATE STAPLE ON ALL POSTS TO STRADDLE ACROSS THE WOOD GRAIN & ALLOW ENOUGH SPACE FOR WIRE TO SLIDE THROUGH THE DRIVEN BACK OF THE STAPLE.

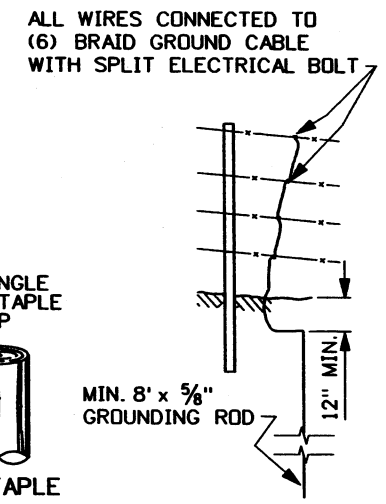

STRAND WIRE FENCES

FENCE GROUNDING TABLE			
kV	* c GROUNDING INTERVAL	FENCE DISTANCE FROM TRANSMISSION ℄	FENCE TYPE
500	200'	0' - 100'	ALL
500	500'	100' - 200'	ALL
345	400'	0' - 100'	ALL
345	1000'	100' - 150'	ALL
>230	500'	50' - 100'	ALL
100-230	120'	WITHIN R/W	ALL
<100	NONE	WITHIN R/W	W/METAL POSTS
	1/4 Mi.	WITHIN R/W	W/WOOD POSTS

* c FENCE PORTIONS LESS THAN THE GROUNDING INTERVAL IN LENGTH SHALL BE GROUNDED ONCE.

NOTES

1. WHEN A FENCE LINE APPROACHES A DITCH, GULLY, OR DEPRESSION, THE LAST POST ON LEVEL GROUND SHALL BE PLACED CLOSE ENOUGH TO THE EDGE OF THE DROP-OFF THAT THE WIRE MAY BE STRUNG TO A POST IN THE DEPRESSION WITHOUT TOUCHING THE GROUND.

2. WHEN THE DEPTH OF A DEPRESSION ON A TYPE 1, 5, OR 11 FENCE EXCEEDS THE TOTAL VERTICAL WIRE SPACING OVER A MAXIMUM HORIZONTAL RUN OF 2 SPACES, AN EXTRA FENCE SHALL BE CONSTRUCTED THROUGH THE DEPRESSION. EXTRA LINE BRACES AND A DEADMAN ARE INCLUDED IN THIS APPLICATION. SEE THE SPECIAL APPLICATIONS FOR BARBED WIRE DETAIL.

3. WHEN A TYPE 1 GATE IS USED IN A SPECIAL SITUATION AS SHOWN ON THE ABOVE DETAIL, EXTRA LINE BRACES AND THE ATTACHED UNDER TIMBER, WIRE, AND WIRE STAYS ARE INCLUDED. THE HORIZONTAL WIRES ON THE UNDER TIMBER ARE NOT TO BE STAPLED BUT WRAPPED AROUND BRACE POST TWICE THEN AROUND THE WIRE ITSELF.

4. THE SPECIAL APPLICATIONS FOR BARBED WIRE FENCES MAY BE USED FOR WOVEN WIRE AND MESH WIRE FENCE TYPES 2, 3, 7, AND 33 WITH PRIOR APPROVAL BY THE ENGINEER OR AS DIRECTED IN THE PLANS. A TYPE 2 GATE SHOULD BE USED WITH THESE FENCES. BARBED WIRE MAY BE USED THROUGH THE DEPRESSIONS OR ETC., HOWEVER THE WIRES MUST MATCH THE WOVEN/MESH WIRE SPACING AS NEARLY AS POSSIBLE. THE UNDER TIMBER SHOULD NOT BE ATTACHED DIRECTLY TO A TYPE 2 GATE.

5. WHEN WOOD BRACES ARE USED AND THE FENCE CORNER ANGLE EXCEEDS 30° ON THE EXTERIOR ANGLE OF THE FENCE, DOUBLE PANELS SHALL BE USED ON THE CORNER BRACE. DOUBLE PANELS FOR LINE AND TERMINAL BRACES SHALL BE INSTALLED ACCORDING TO THE FENCE BRACE TABLE.

6. METAL BRACES SHALL BE USED AS SHOWN IN THE METAL BRACE DETAILS AND THE FENCE BRACE TABLE.

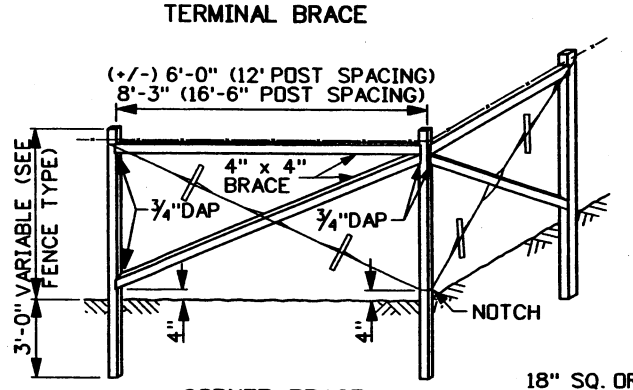

CORNER BRACE

WOOD BRACES

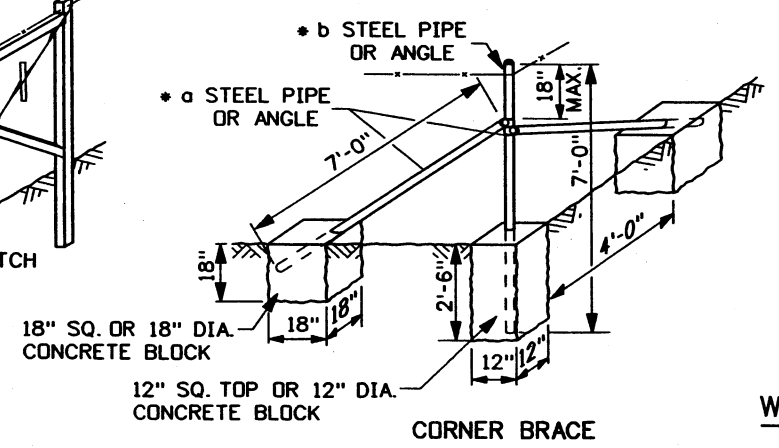

CORNER BRACE

* a 2" x 2" x 1/4" ANGLE OR 1.625" O.D. STD. STEEL PIPE BRACE.
* b 2 1/2" x 2 1/2" x 1/4" ANGLE OR 2.375" O.D. STD. STEEL PIPE POST.

METAL BRACES

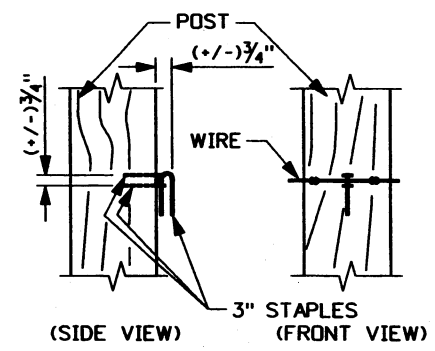

FOR DROP FENCE TYPE 6

WOOD POST STAPLEING DETAILS

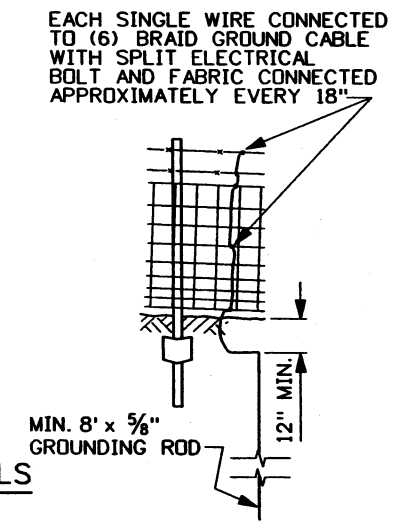

MESH WIRE FENCES

FENCE GROUNDING DETAILS

REVISIONS								
NO.	DATE	BY	NO.	DATE	BY	NO.	DATE	BY
1	4-73		6	3-80		11	1-97	MSM
2	12-73		7	7-84		12	11-00	MSM
3	2-74		8	5-90	GB	13	11-01	MSM
4	2-77		9	12-92	MSM	14	5-04	MSM
5	1-78		10	9-93	MSM	15	10-04	MSM

SCALES SHOWN ARE FOR 11" X 17" PRINTS ONLY

CADD FILE NAME f2a_1004.std

DRWG. ORIG. DATE: FEBRUARY, 1973

IDAHO TRANSPORTATION DEPARTMENT

BOISE IDAHO

ASSISTANT CHIEF ENGINEER (DEVELOPMENT)

CHIEF ENGINEER

STANDARD DRAWING

STANDARD BARBED, WOVEN, MESH, COMBINATION WIRE FENCES, & FENCING DETAILS

REQUIRES SHEETS 1 OF 3 & 3 OF 3

English

STANDARD DRWG. NO.

F-2-A

SHEET 2 OF 3

PROFESSIONAL ENGINEER REGISTERED 2240 10/13/04 STATE OF IDAHO MILFORD L. MILLER

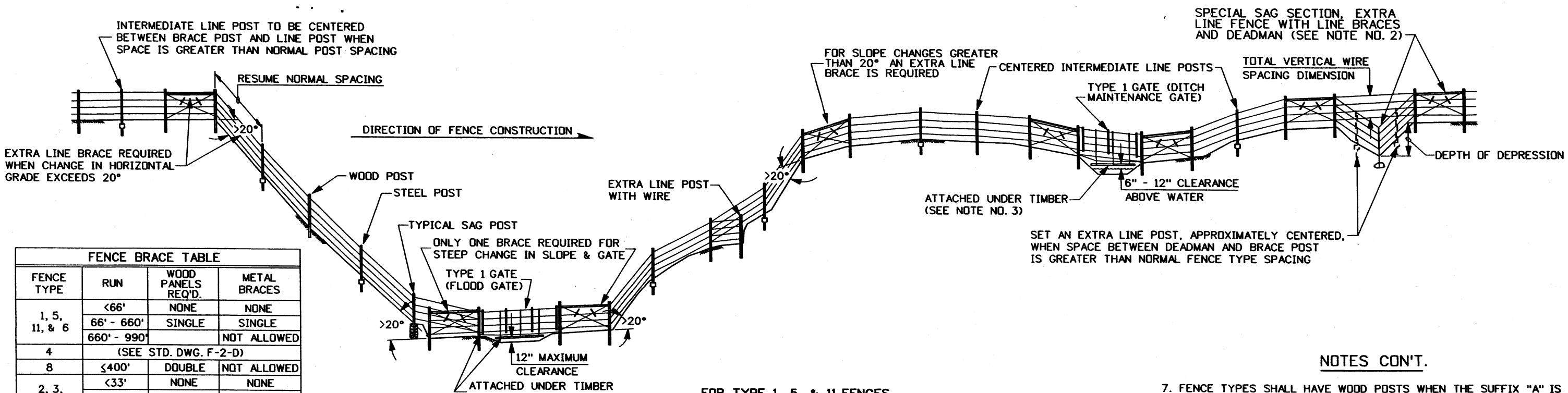

FOR TYPE 1, 5, & 11 FENCES

SPECIAL APPLICATIONS FOR BARBED WIRE FENCES

FENCE BRACE TABLE			
FENCE TYPE	RUN	WOOD PANELS REQ'D.	METAL BRACES
1, 5, 11, & 6	<66'	NONE	NONE
	66' - 660'	SINGLE	SINGLE
	660' - 990'		NOT ALLOWED
4	(SEE STD. DWG. F-2-D)		
8	≤400'	DOUBLE	NOT ALLOWED
2, 3, 7, & 33	<33'	NONE	NONE
	33' - 330'	SINGLE	SINGLE
	330' - 660'	DOUBLE	NOT ALLOWED

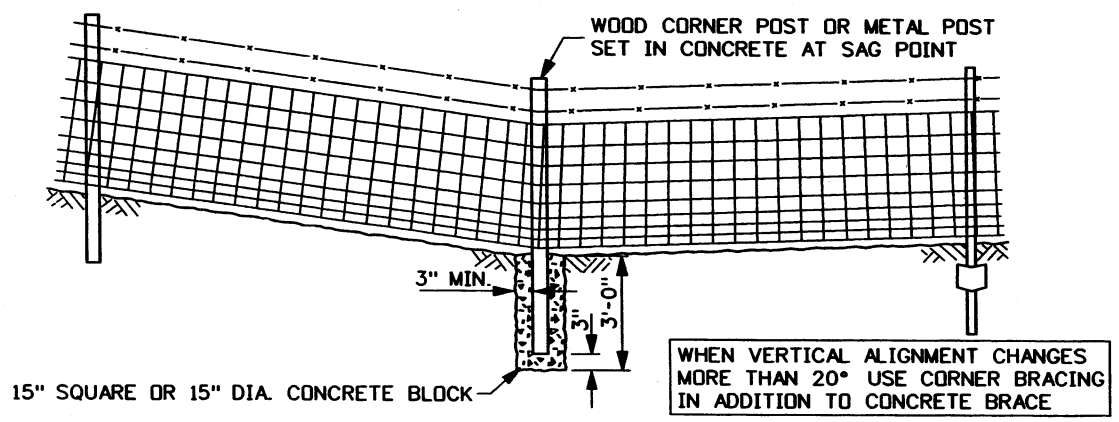

TYPICAL SAG SECTION FOR WOVEN WIRE, MESH, OR COMBINATION FENCES

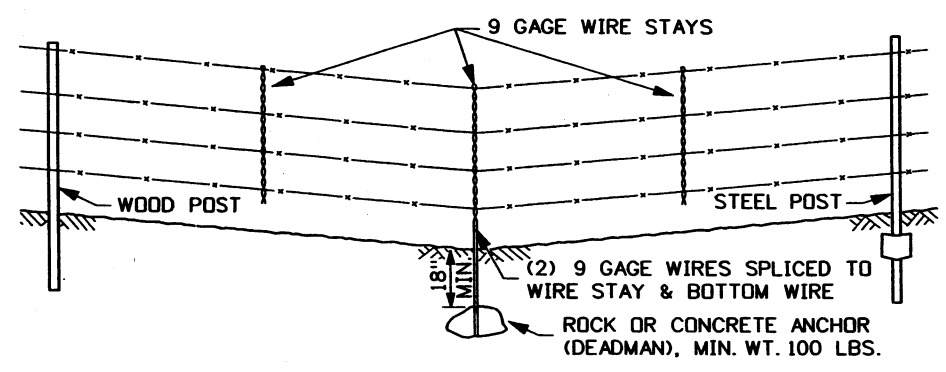

TYPICAL SAG SECTION - BARBED WIRE FENCES

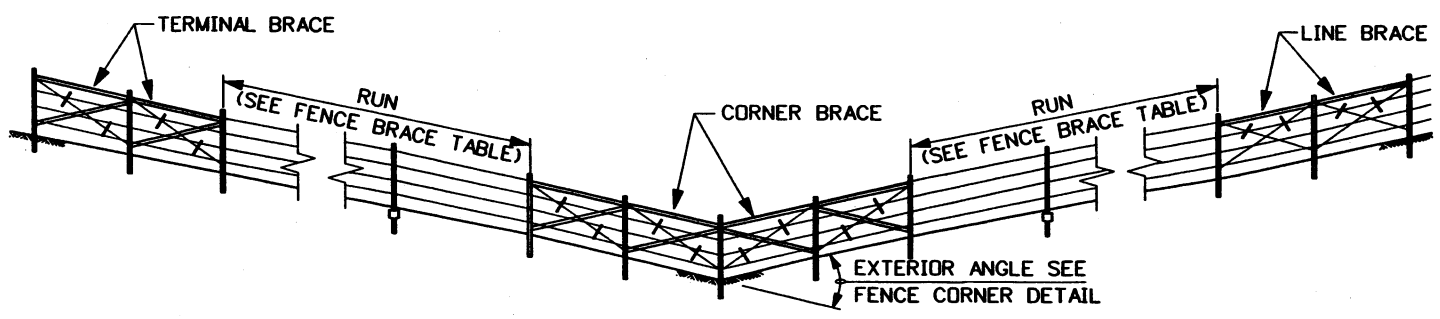

DOUBLE BRACE PANELS

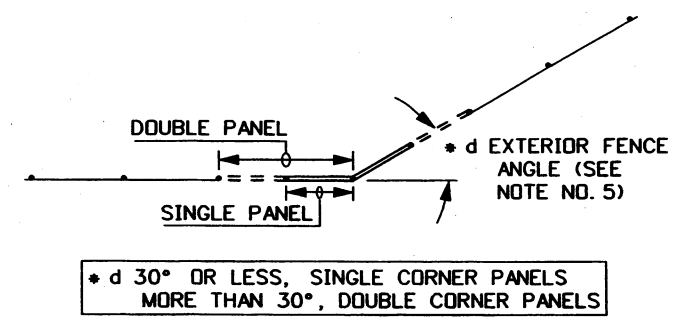

FENCE CORNER ANGLE

NOTES CON'T.

7. FENCE TYPES SHALL HAVE WOOD POSTS WHEN THE SUFFIX "A" IS USED AND METAL POSTS WHEN THE SUFFIX "B" IS USED I.E., TYPE 3-A (WOOD POSTS) ON TYPE 1-B (METAL POSTS).

8. MESH WIRE ON WOOD POSTS SHALL HAVE STAPLES ON ALTERNATE WIRES EXCEPT FOR SAG SECTIONS WHEN ALL WIRES WILL BE STAPLED. MESH WIRE ON STEEL POSTS SHALL HAVE FOUR WIRE CLAMPS PER POST EXCEPT IN SAG SECTIONS THREE ADDITIONAL CLAMPS PER POST WILL BE REQUIRED.

9. BARBED WIRE ON WOOD POSTS SHALL HAVE ONE STAPLE PER WIRE PER POST AND TWO STAPLES PER WIRE PER POST ON BRACES AND IN SAG SECTIONS. WIRE ENDS SHALL BE SECURLY WRAPPED AROUND A POST AT A BRACE OR SPLICED IN LINE. BARBED WIRE ON METAL POSTS SHALL HAVE ONE WIRE CLAMP PER WIRE PER POST.

10. ALL METAL POSTS SHALL HAVE AN ANCHOR PLATE ATTACHED TO THE POST UNLESS THE POST IS SET IN SOLID ROCK. DRILL HOLES SHALL BE GROUTED IN FOR METAL POSTS SET IN SOLID ROCK.

11. BARBED WIRE ON METAL POSTS SHALL HAVE ONE WIRE CLAMP PER WIRE PER POST.

12. WHERE A FENCE TIES INTO A BRIDGE PARAPET OR RAILING, THE TOP OF THE FENCE SHALL NOT PROJECT ABOVE THE TOP OF THE PARAPET OR RAILING.

13. ALL WOVEN WIRE AND BARBED WIRE FENCES SHALL CONFORM TO SUBSECTION 610 - FENCES AND ALL METAL POSTS, BARBED WIRE, MESH WIRE, AND WOVEN WIRE SHALL CONFORM TO SUBSECTIONS 708.09 THRU 708.12 OF THE STANDARD SPECIFICATIONS.

14. FOR STANDARD BRACE PLACEMENT AND SPECIAL APPLICATIONS ON BARBED WIRE FENCES AND WOOD BRACES SEE SHEET 3 OF 3.

15. ALL BARBED, WOVEN, MESH, AND COMBINATION WIRE FENCES SHALL BE GROUNDED ACCORDING TO THE FENCE GROUNDING TABLE AND THE METHOD SHOWN ON FENCE GROUNDING DETAIL. TYPE 2 GATES FALLING WITHIN THESE AREAS SHALL BE GROUNDED WITH A FLEXIBLE GROUNDING CABLE ATTACHED TO THE GATE FABRIC. ATTACH THE CABLE TO A SEPARATE FENCE GROUNDING SYSTEM ON THE SWING SIDE OF THE GATE. DO NOT GROUND TYPE 1 GATES.

16. NOT TO SCALE.

REVISIONS								
NO.	DATE	BY	NO.	DATE	BY	NO.	DATE	BY
1	4-73		6	3-80		11	1-97	MSM
2	12-73		7	7-84		12	11-00	MSM
3	2-74		8	5-90	GB	13	11-01	MSM
4	2-77		9	12-92	MSM	14	5-04	MSM
5	1-78		10	9-93	MSM	15	10-04	MSM

SCALES SHOWN ARE FOR 11" X 17" PRINTS ONLY

CADD FILE NAME f2a_1004.std

DRWG. ORIG. DATE: FEBRUARY, 1973

IDAHO TRANSPORTATION DEPARTMENT

BOISE IDAHO

ASSISTANT CHIEF ENGINEER (DEVELOPMENT)

CHIEF ENGINEER

STANDARD DRAWING

STANDARD BARBED, WOVEN, MESH, COMBINATION WIRE FENCES, & FENCING DETAILS

REQUIRES SHEETS 1 OF 3 & 2 OF 3

English

STANDARD DRWG. NO.

F-2-A

SHEET 3 OF 3

PROFESSIONAL ENGINEER REGISTERED 2240 10/13/04 STATE OF IDAHO MILFORD L. MILLER

PROSPECTIVE BIDDERS
I-84 ROW FENCE REPLACEMENT 4/06

IDAHO FENCE CO PO BOX 2853 POST FALLS ID 83877 208 773 3781	NORTHWEST FENCE CO N 7488 GOVERNMENT WAY COEUR D ALENE ID 83815 208 772 8547	AMERICAN FENCE CO PO BOX 1464 HAYDEN ID 83836 208 667 4075
BUETTS & SONS FENCE 62 EAST LETA INKOM ID 83245 208 775 3233	MONROE FENCE CO 238 HENRY CHUBBUCK ID 83202 208 237 1491	AMERICAN FENCE CO 3500 US HWY 30 POCATELLO ID 83202 208 234 2258
AMER FENCE CO OF ID PO BOX 1286 POCATELLO ID 83204 208 234 2258	BASE WARD PO BOX 213 ALMO ID 83312 208 824 5766	BILLS FENCING 3176 N 3000 E TWIN FALLS ID 83301 208 733 5454
BRETT SEWARD 29302 HWY 20/26 PARMA ID 93660 208 989 5595	BUTTE FENCING 116 S 600 W PAUL ID 83347 208 438 8293	CRAIG GRAYER PO BOX 294 KIMBERLY ID 83341 208 423 5494
FORTRESS FENCE INC PO BOX 336 FILER ID 83328 208 736 4917	SLOAN FENCING & CONST 6851 W TARGEE ST BOISE ID 83709 208 344 8379 208 344 8399	SHERRER CONTRACTING INC PO BOX 270 ELK CITY ID 83525 208 842 2597 208 842 2265
DIAMOND N CONST 5096 FORREST RIDGE RD SILVERTON OR 97381 503 874 9510 503 874 9480	WALTON INC 1340 HWY 30 HAYBURN ID 83336 208 678 7700 208 678 4948	CROOKED FORK FENCE PO BOX 224 LOLO MT 59847 406 273 3342 406 273 3110
FENCES IDAHO ATTN: LES CARBERRY 1201 S 2500 E GOODING IDAHO 83330 208 280 2181 208 544 7614	EAGLE EYE FENCING LLC 5372 S 6700 W HOOPER UT 84315 801 644 9167 801 985 1337	ANGLE & ASSOC 6600 S 5TH AVE POCATELLO ID 83204 208 232 0136 208 232 0166
PAVEMENT MARKINGS NW 4850 HENRY ST BOISE IDAHO 83709 208 388 8858 208 433 8828	SOUTHFORK CONST 9616 W MARTINGALE BOISE ID 83709 208 870 0742 208 672 9616	CLAIR PETER 1355 E 1750 S MALTA ID 83342 208 638 5522