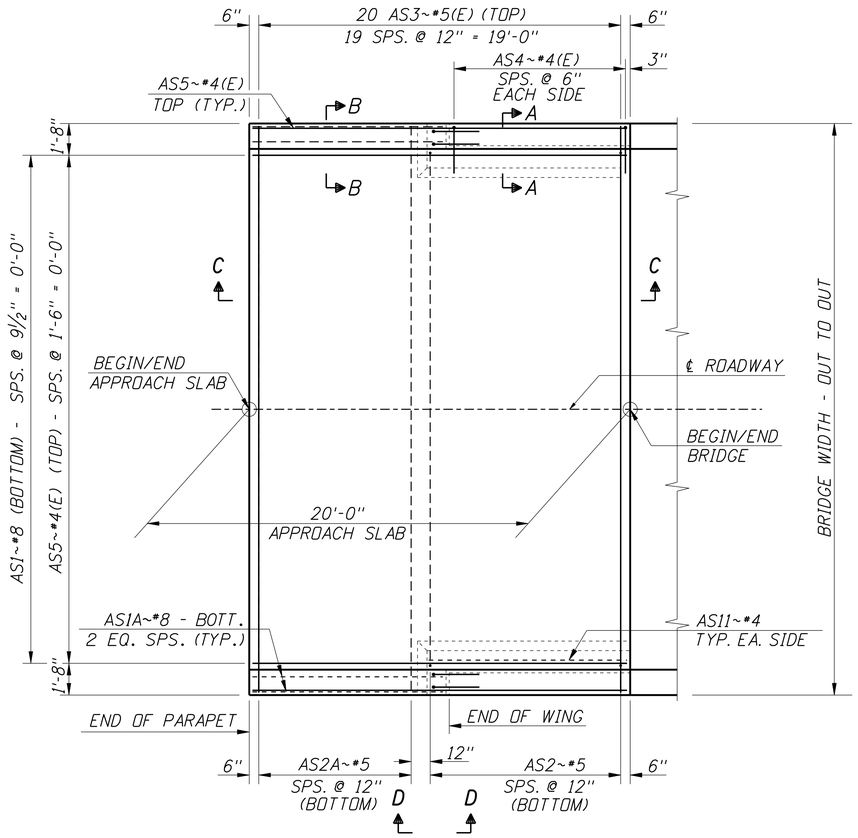

APPROACH SLAB - PLAN
¼"=1'-0"

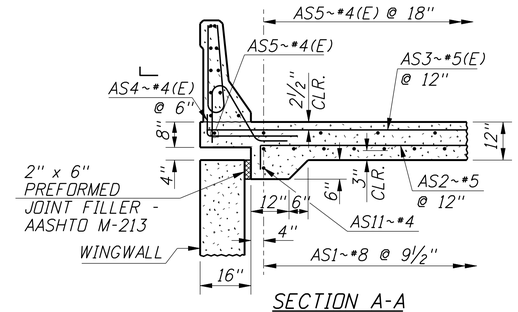

SECTION A-A
½"=1'-0"

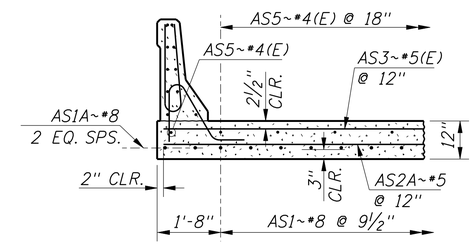

SECTION B-B
½"=1'-0"

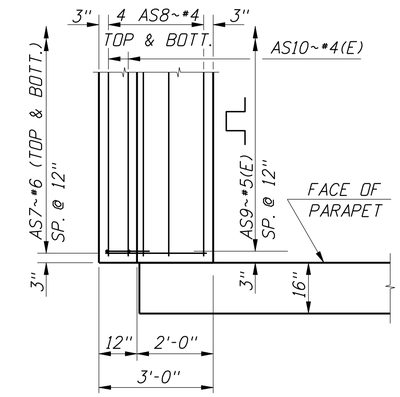

PLAN
CONCRETE SLEEPER BEAM
½"=1'-0"

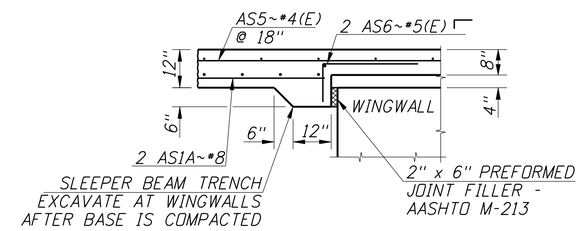

VIEW D-D
½"=1'-0"

APPROXIMATE QUANTITIES

CONCRETE	0 CY
PLAIN REINF.	0 LB
EPOXY REINF.	0 LB

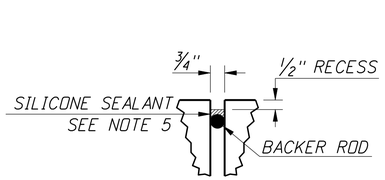

DETAIL A
3"=1'-0"

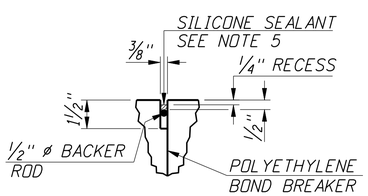

DETAIL B
3"=1'-0"

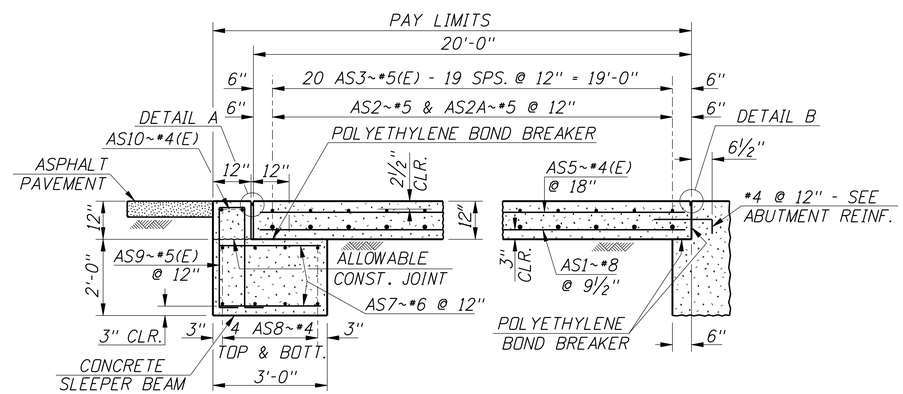

SECTION C-C
½"=1'-0"

NOTES

1. BEFORE POURING THE APPROACH SLAB, PROVIDE A 2' DEEP BASE OF GRANULAR MATERIAL COMPACTED TO MEET CLASS "A" COMPACTION REQUIREMENTS.
2. PLACE LONGITUDINAL REINFORCEMENT PARALLEL TO THE CENTERLINE OF THE ROADWAY; PLACE THE TRANSVERSE REINFORCEMENT PARALLEL TO THE ABUTMENT.
3. ALL REINFORCEMENT SHALL BE AASHTO M31 (ASTM A615) GRADE 60. THE TOP MAT OF BOTH TRANSVERSE AND LONGITUDINAL REINFORCEMENT SHALL BE EPOXY COATED. ALL BEND DETAILS TO BE ACCORDING TO THE LATEST A.C.I. STANDARD PRACTICE AND AASHTO SPECIFICATIONS.
4. APPROACH SLAB CONCRETE SHALL BE CLASS 40A.
5. SILICONE JOINT SEAL SHALL BE DOW CORNING 902, WATSON BOWMAN SILICONE SEALANT, OR APPROVED EQUAL. THE JOINT SHALL BE INSTALLED IN ACCORDANCE WITH THE MANUFACTURER'S SPECIFICATIONS.
6. PLACE POLYETHYLENE BOND BREAKER OR FILTER FABRIC BETWEEN APPROACH SLAB AND SUBGRADE.
7. APPROACH SLAB WILL BE MEASURED BY THE SQUARE YARD, COMPLETE IN PLACE AND WILL BE PAID FOR UNDER THE BID ITEM 502-435A.

REVISIONS			
NO.	DATE	BY	DESCRIPTION
△			
△			
△			
△			
△			

DESIGNED
DESIGN CHECKED
DETAILED
DWG. CHECKED
CORRECTIONS

SCALES SHOWN ARE FOR 34" X 22" PRINTS ONLY
CADD FILE NO.
\cadds\std_dgns\
b02_1a.dgn
DRAWING DATE:
MAR 2011

ORIGINAL SIGNED BY:
DATE SIGNED: DATE
ORIGINAL STORED AT ITD BRIDGE SECTION

IDAHO TRANSPORTATION DEPARTMENT

English
PROJECT NO.

APPROACH SLAB DETAILS - ASPHALT PAVEMENT

SKEW = 0°, NO ABUTMENT JOINT

BRIDGE PLANS
BRIDGE LRFD MANUAL, PAGE B2.1A
COUNTY | KEY NO.
BRIDGE DRAWING NO. | SHEET OF