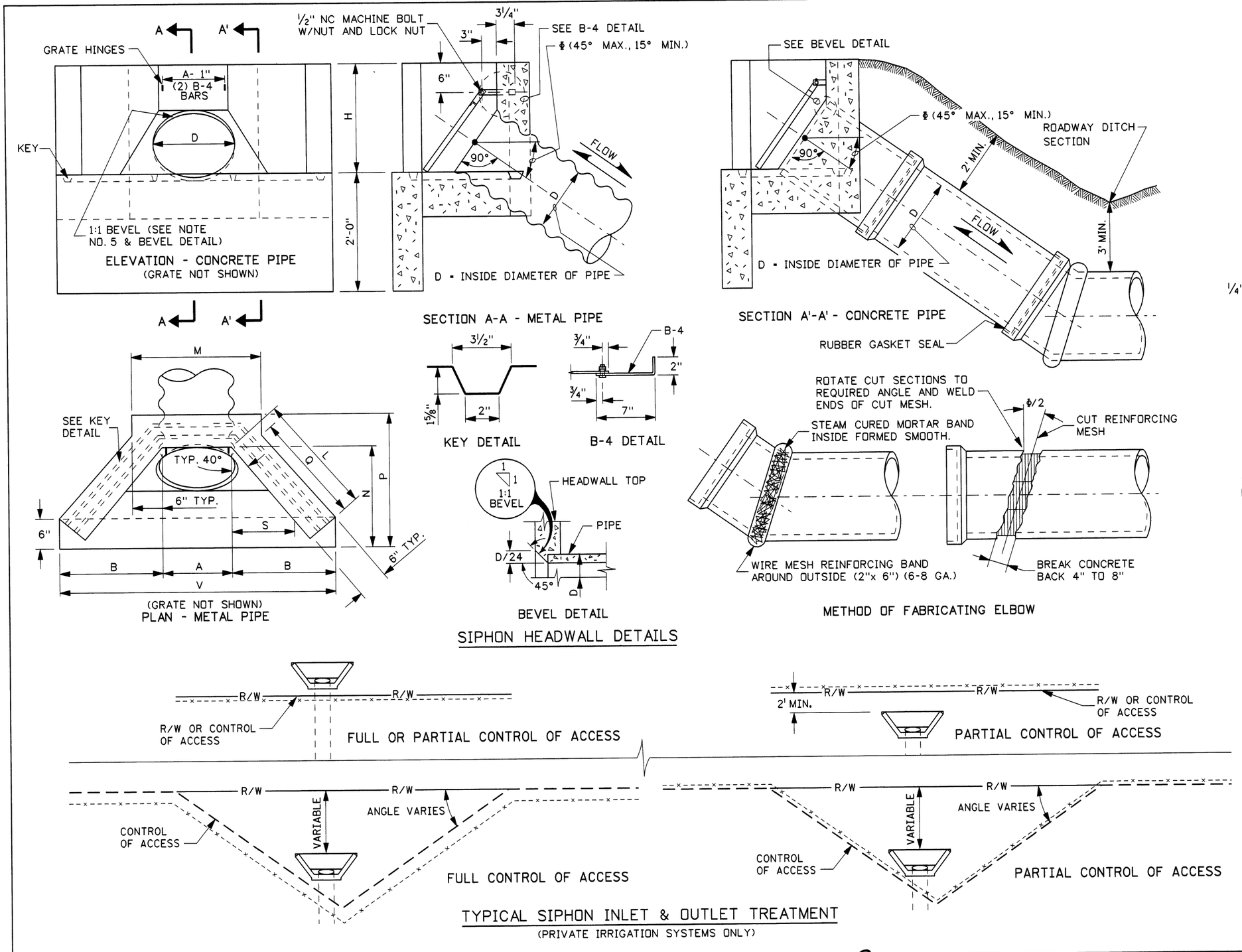

REVISIONS								
NO.	DATE	BY	NO.	DATE	BY	NO.	DATE	BY
1	2-64		6	6-92	MSM			
2	2-68		7	12-92	TMR			
3	9-68		8	6-02	MSM			
4	10-69		9	12-05	MSM			
5	4-90	CR						

SCALES SHOWN ARE FOR 11" X 17" PRINTS ONLY

CADD FILE NAME d10_1205.std

DRWG. ORIG. DATE: AUGUST 1961

IDAHO TRANSPORTATION DEPARTMENT

BOISE IDAHO

R. D. Thomas
ASSISTANT CHIEF ENGINEER (DEVELOPMENT)

Steven C. Hutchinson
CHIEF ENGINEER

STANDARD DRAWING

CONCRETE HEADWALL FOR SIPHONS

REQUIRES SHEET 2 OF 2

English

STANDARD DRWG. NO.

D-10

SHEET 1 OF 2

PROFESSIONAL ENGINEER * LAND SURVEYOR
REGISTERED
2240
12/19/05
STATE OF IDAHO
MILFORD MILLER

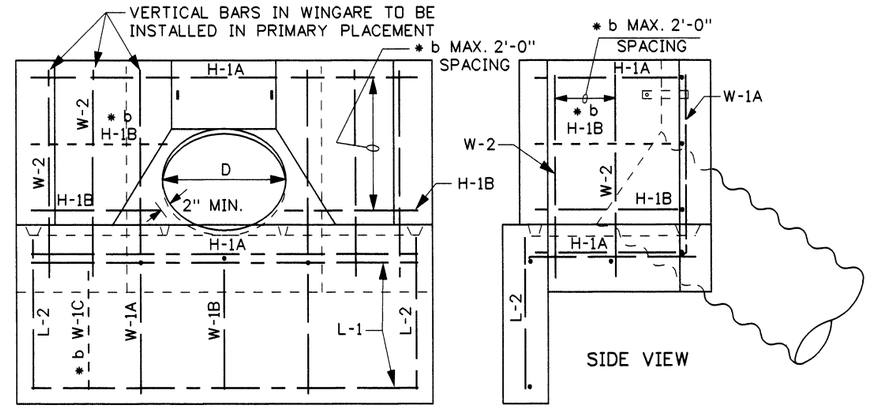

ELEVATION

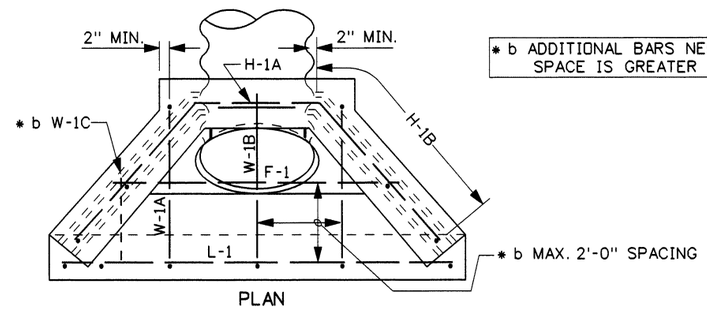

PLAN

* b ADDITIONAL BARS NEEDED WHEN SPACE IS GREATER THAN 2'-0"

METAL REINFORCEMENT DETAILS

METAL REINFORCEMENT TABLE

MARK	LOCATION	BAR SIZE	(NO.BARS) HDWL. SIZE	SKETCH
F-1	FLOOR	NO. 4	(1) 12"-36" (2) 42"	
L-1	TOP & BOTTOM OF INLET LIP IN FLOOR	NO. 4	(2) 12"-42"	
H-1A	HORIZ. IN TOP OF WING WALL & IN FLOOR BACK WALL	NO. 4	(2) 12"-42"	130°
H-1B	HORIZ. IN WING WALL BETWEEN H-1As' (PAIRS ONLY)	NO. 4	(2) 12"-24" (4) 30"-36" (6) 42"	PIPE, 2", 130°
W-1A	EACH SIDE OF PIPE IN BACKWALL, FLOOR, & INLET LIP	NO. 4	(2) 12"-42"	90°, 90°
W-1B	IN FLOOR, & INLET LIP	NO. 4	(1) 12"-30" (2) 36"-42"	90°
W-1C	IN FLOOR, & INLET LIP	NO. 4	(2) 21"-42"	90°
L-2	VERTICAL IN FLOOR, & INLET LIP	NO. 4	(2) 12"-42"	
W-2	VERTICAL IN WING WALLS	NO. 4	(4) 12"-30" (6) 36"-42"	

CONCRETE & STEEL QUANTITY TABLE

NOMINAL SIZE DIAMETER (IN.)	CONCRETE (C.Y.) WINGS & BCKWL.	FLOOR	LIP	TOTAL	STEEL (LBS.)
12	0.179	0.148	0.167	0.494	24.6
15	0.240	0.200	0.193	0.633	27.8
18	0.309	0.259	0.220	0.788	31.0
21	0.386	0.326	0.247	0.959	35.8
24	0.472	0.400	0.274	1.146	39.4
30	0.671	0.572	0.327	1.570	46.1
36	0.905	0.774	0.381	2.061	57.6
42	1.176	1.007	0.435	2.618	73.6

HEADWALL DIMENSION TABLE

IN INCHES

CULVERT SIZE DIAMETER (IN.)	D/24	A	B	H	L	M	N	P	Q	S	V
12	1/2	13	20 7/16	21	24 5/8	25	21	27 1/2	22 7/16	12 9/16	53 13/16
15	5/8	16 1/4	23 1/8	24 1/4	28 7/8	28 1/4	24 1/4	30 7/8	26 11/16	15 5/16	62 9/16
18	3/4	19 1/2	25 7/8	27 1/2	33 1/8	31 1/2	27 1/2	34 1/4	30 15/16	18 1/16	71 1/4
21	7/8	22 3/4	28 5/8	30 3/4	37 5/16	34 3/4	30 3/4	37 5/8	35 3/16	20 3/4	79 15/16
24	1	26	31 5/16	34	41 9/16	38	34	41	39 3/8	23 1/2	88 5/8
30	1 1/4	32 1/2	36 3/4	40 1/2	50 1/16	44 1/2	40 1/2	47 3/4	47 7/8	28 15/16	106 1/16
36	1 1/2	39	42 1/4	47	58 9/16	51	47	54 1/2	56 3/8	34 3/8	123 1/2
42	1 3/4	45 1/2	47 11/16	53 1/2	67 1/16	57 1/2	53 1/2	61 1/4	64 7/8	39 5/8	140 7/8

GRATE DIMENSION & MATERIALS TABLE

IN INCHES

CULVERT SIZE DIAMETER (IN.)	DIMENSIONS A'	* c X	Y	Z	BAR SIZES B-1	B-2	B-3	B-4
12	11	19 3/16	28 1/2	18 7/8	1x1/4	1 1/4x1/4	1 1/4x1 1/4x1/4	1x1/4x9
15	14	23 3/4	36 7/8	24 3/16	1x1/4	1 1/4x1/4	1 1/4x1 1/4x1/4	1x1/4x9
18	17	28 3/8	45 5/16	29 1/2	1x1/4	1 1/4x1/4	1 1/4x1 1/4x1/4	1x1/4x9
21	20	32 15/16	53 3/4	34 13/16	1x1/4	1 1/4x1/4	1 1/4x1 1/4x1/4	1x1/4x9
24	23	37 9/16	62 3/16	40 1/8	1x1/4	1 1/4x1/4	1 1/4x1 1/4x1/4	1x1/4x9
30	29	46 3/4	79 1/16	50 13/16	1 1/4x1/4	1 1/2x1/4	1 1/2x1 1/2x1/4	1 1/2x1/4x9
36	35	55 7/8	92 15/16	61 1/2	1 1/2x1/4	1 3/4x1/4	1 3/4x1 3/4x1/4	1 3/4x1/4x9
42	41	65 1/16	112 3/16	72 3/16	1 3/4x1/4	2 1/4x3/8	2 1/4x2 1/2x3/8	2 1/4x3/8x9

* c ALLOW 3/4"-1" EXTRA BAR LENGTH FOR HOLE FABRICATION

NOTES

1. THE SIPHON HEADWALL SHALL BE USED ONLY WHEN PROTECTED BY GUARDRAIL OR INSTALLED OUTSIDE THE CLEAR ZONE.
2. ALL CAST-IN-PLACE HEADWALLS SHALL CONFORM TO SECTION 609 - MINOR STRUCTURES, OF THE CURRENT ITD STANDARD SPECIFICATIONS FOR HIGHWAY CONSTRUCTION.
3. THE METAL REINFORCEMENT SHALL BE NO. 4 BARS. ALL REINFORCEMENT SHALL HAVE A MINIMUM CONCRETE COVER OF 2" OR 3" MINIMUM COVER IF CAST AGAINST EARTH.
4. ALL EDGES TO HAVE 3/4" CHAMFER OR TOOLED EDGES.
5. ALL PIPE INLETS/OUTLETS WITH A CONCRETE SIPHON HEADWALL SHALL HAVE THE INLET HEADWALLS BEVELED. USE ENTRANCE LOSS COEFFICIENT K_e = 0.2 FOR BEVELED ENTRANCES.
6. THE METAL FOR THE GRATE SHALL MEET THE REQUIREMENTS OF ASTM A 36. WELDING OF THE METAL GRATE SHALL MEET THE REQUIREMENTS OF THE AMERICAN WELDING SOCIETY D1.1. GRATES FOR INLET HEADWALLS WILL BE REQUIRED ONLY WHEN SHOWN ON THE ROADWAY PLANS. GRATES NEED NOT BEPAINTED OR GALVANIZED.
7. THE USE OF CONCRETE, CORRUGATED METAL, OR CORRUGATED POLYETHYLENE PIPE WITH A SIPHON HEADWALL IS ALLOWED (CONCRETE PIPE SHOWN ON DRAWING).
8. A SIPHON SYSTEM REQUIRES A GRATE ON THE BOTH INLET AND OUTLET HEADWALL.
9. NOT TO SCALE.

PROFESSIONAL ENGINEER * LAND SURVEYOR REGISTERED 2240 12/19/05 STATE OF IDAHO MILFORD MILLER

REVISIONS

NO.	DATE	BY	NO.	DATE	BY	NO.	DATE	BY
1	2-64		6	6-92	MSM			
2	2-68		7	12-92	TMR			
3	9-68		8	6-02	MSM			
4	10-69		9	12-05	MSM			
5	4-90	GB						

SCALES SHOWN ARE FOR 11" X 17" PRINTS ONLY

CADD FILE NAME d10_1205.std

DRWG. ORIG. DATE: AUGUST, 1961

IDAHO TRANSPORTATION DEPARTMENT

BOISE IDAHO

ASSISTANT CHIEF ENGINEER (DEVELOPMENT)

CHIEF ENGINEER

STANDARD DRAWING

CONCRETE HEADWALL FOR SIPHONS

REQUIRES SHEET 1 OF 2

English

STANDARD DRWG. NO.

D-10

SHEET 2 OF 2