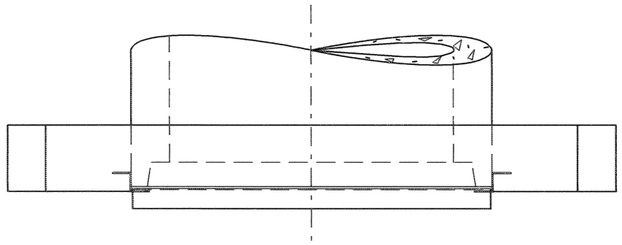

PLAN

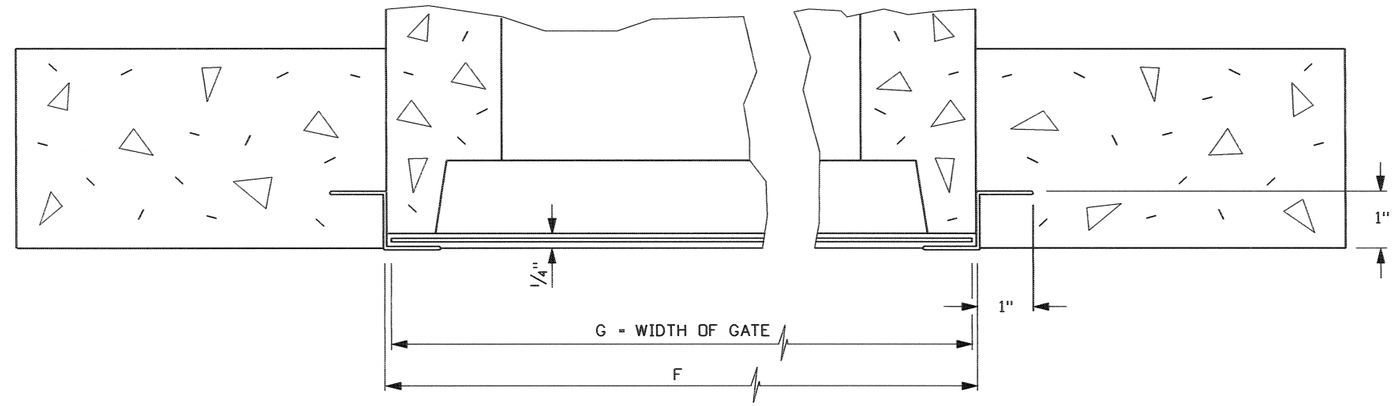

SECTION A-A

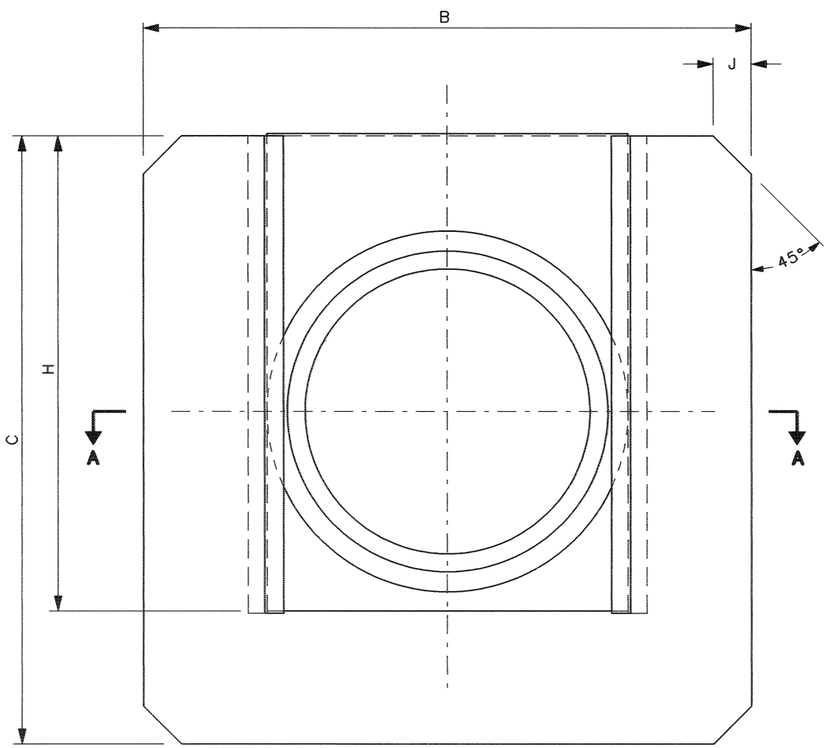

END ELEVATION

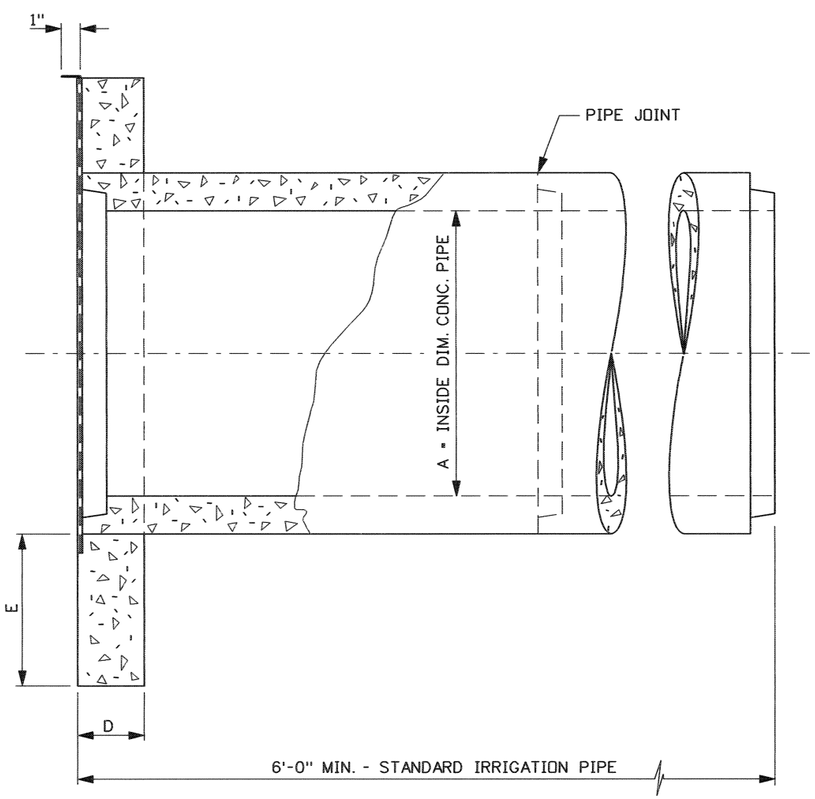

SIDE ELEVATION

MINIMUM DIMENSION TABLE								
PIPE DIA.	MINIMUM DIMENSIONS (INCHES)							
A	B	C	D	E	F	G	H	J
4	15	15	2½	3	8¼	8	13	1½
6	15	15	2½	3	8¼	8	13	1½
8	22	22	3	6	12½	12¼	17	2
10	22	22	3	6	12½	12¼	17	2
12	27	27	3	7	16¼	16	21	2
15	32	32	3½	8	19¼	19	25	2
18	36	36	4	9	23¾	23½	28	3
21	42	42	4	11	26¼	26	32	3
24	54	54	4	15	30¼	30	40	3
30	60	60	4	19	36¼	36	42	3

NOTES

1. SLIDE GATE AND GUIDES SHALL BE 16 GAGE GALVANIZED STEEL.
2. NO SCALE IS REPRESENTED ON THESE DRAWING ILLUSTRATIONS.

REVISIONS								
NO.	DATE	BY	NO.	DATE	BY	NO.	DATE	BY
1	8-64							
2	11-86	GB						
3	9-01	MSM						
4	3-05	MSM						

SCALES SHOWN ARE FOR 11" X 17" PRINTS ONLY

CADD FILE NAME d6__0305.std

DRWG. ORIG. DATE: APRIL, 1961

IDAHO TRANSPORTATION DEPARTMENT

BOISE IDAHO

P.D. Thomas
ASSISTANT CHIEF ENGINEER (DEVELOPMENT)

Steven C. Hutchinson
CHIEF ENGINEER

STANDARD DRAWING

PRECAST CONCRETE HEADGATE

English

STANDARD DRWG. NO.

D-6

SHEET 1 OF 1

PROFESSIONAL ENGINEER * LAND SURVEYOR
BERT STERLING
2240
3/4/05
STATE OF IDAHO
MILFORD MILLER