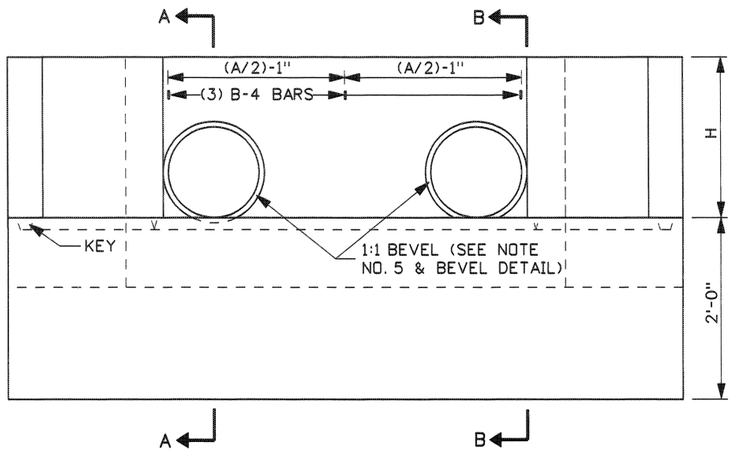


ELEVATION

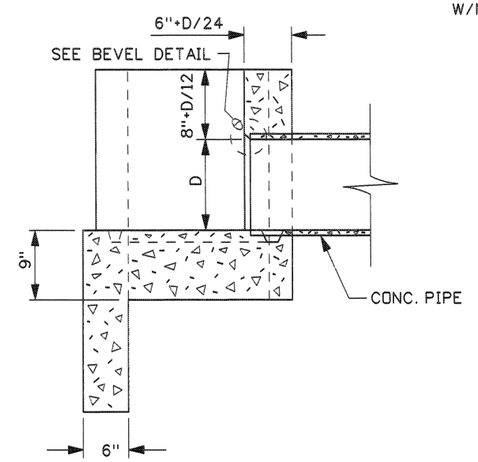


SECTION A-A

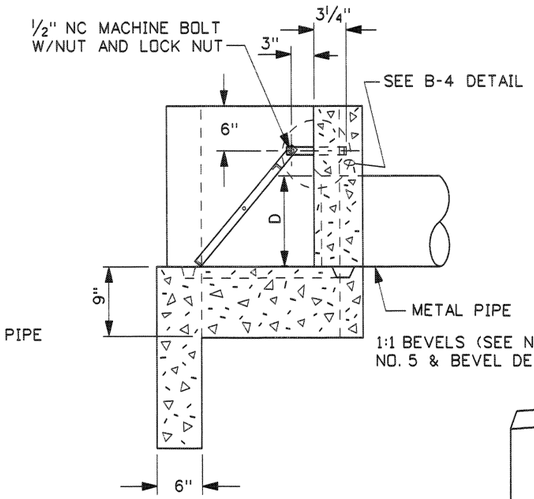


SECTION B-B

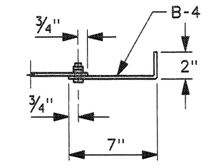


B-4 DETAIL

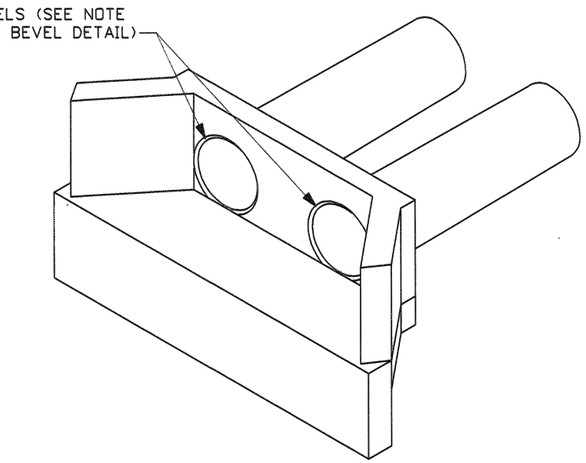

ISOMETRIC VIEW

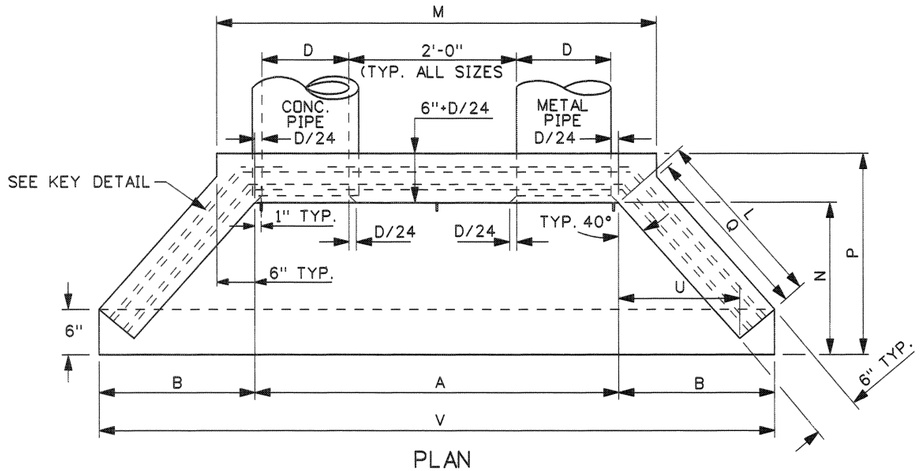


PLAN

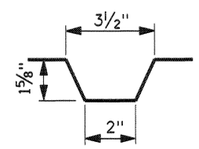


KEY DETAIL

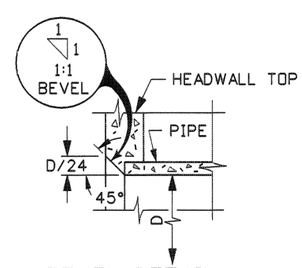


BEVEL DETAIL

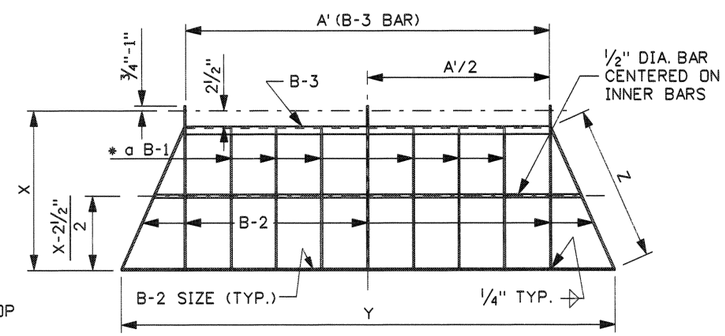


* a BARS SHALL BE EQUALLY SPACED IN GRATE NOT TO EXCEED 8" CENTER TO CENTER OR LESS THAN 6" CENTER TO CENTER.

INLET GRATE DETAIL

| REVISIONS | | | | | | | | |
|---|---|---|---|---|---|---|---|---|
| NO. | DATE | BY | NO. | DATE | BY | NO. | DATE | BY |
| 1 | 2-68 | | 6 | 12-92 | TMR | | | |
| 2 | 9-68 | | 7 | 10-01 | MSM | | | |
| 3 | 10-69 | | 8 | 6-03 | MSM | | | |
| 4 | 4-90 | GB | 9 | 3-05 | MSM | | | |
| 5 | 3-92 | MSM | | | | | | |

SCALES SHOWN ARE FOR 11" X 17" PRINTS ONLY

CADD FILE NAME d7__0305.std

DRWG. ORIG. DATE: MAY, 1964

IDAHO TRANSPORTATION DEPARTMENT

BOISE IDAHO

P D Thomas
ASSISTANT CHIEF ENGINEER (DEVELOPMENT)

Steven C. Dickinson
CHIEF ENGINEER

STANDARD DRAWING

CONCRETE HEADWALL FOR TWIN PIPE CULVERTS

REQUIRES SHEET 2 OF 2

English

STANDARD DRWG. NO.

D-7

SHEET 1 OF 2

PROFESSIONAL ENGINEER * LAND SURVEYOR REGISTERED 2240 3/4/05 STATE OF IDAHO MILFORD MILLER

## D-7 METAL REINFORCEMENT TABLE

| MARK | LOCATION | BAR SIZE | SKETCH |
|---|---|---|---|
| F-1 | FLOOR | NO. 4 | |
| H-1A | HORIZ. IN TOP OF WING WALL & IN FLOOR BACKWALL | NO. 4 | 130° |
| H-1B | HORIZ. IN WING WALL BETWEEN H-1As' (PAIRS) | NO. 4 | 2" MIN., 2"*TYP., 2" MIN., PIPE, H-1C, PIPE, W-1A, 130° |
| H-1C | HORIZ. IN WING BACKWALL BTWN. PIPES AS CONTINUATION OF H-1Bs' | NO. 4 | 2", VARIES, 2", PIPE, PIPE |
| L-1 | TOP & BOTTOM OF INLET LIP IN FLOOR | NO. 4 | |
| L-2 | VERTICAL IN FLOOR, & INLET LIP | NO. 4 | |
| W-1A | EACH SIDE OF PIPE IN BACKWALL, FLOOR, & INLET LIP | NO. 4 | 90°, 90° |
| W-1B | IN FLOOR, & INLET LIP, UNDER PIPES | NO. 4 | 90° |
| W-1C | IN FLOOR, & INLET LIP | NO. 4 | 90° |
| W-2 | VERTICAL IN WING WALLS | NO. 4 | |

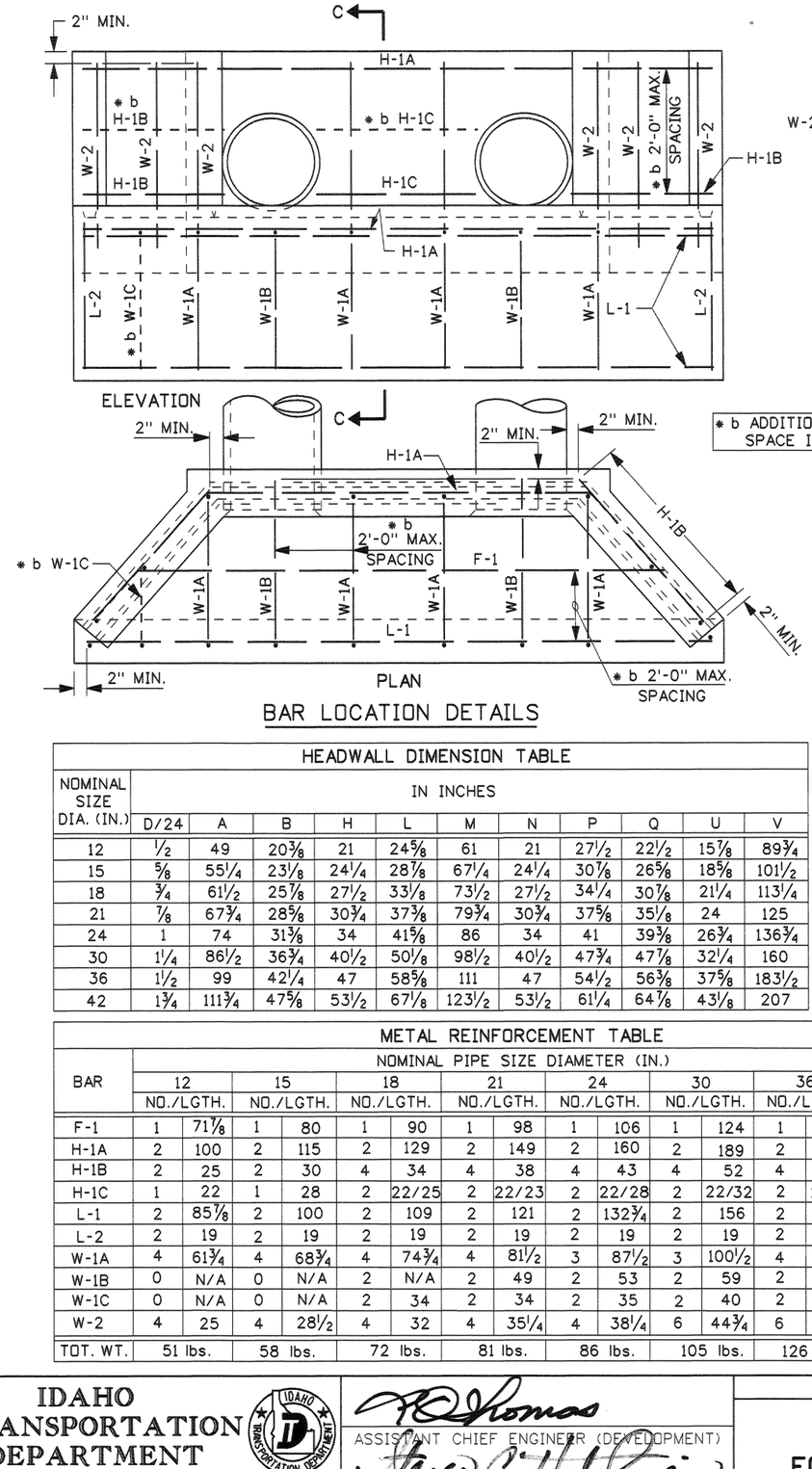


BAR LOCATION DETAILS

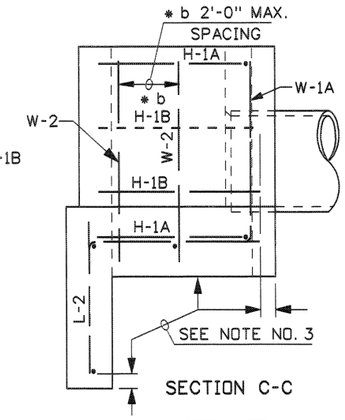


SECTION C-C

* b ADDITIONAL BARS NEEDED WHEN SPACE IS GREATER THAN 2'-0"

## CONCRETE QUANTITY TABLE

| NOMINAL SIZE DIA. (IN.) | CONCRETE (C.Y.) WINGS & BCKWL. | FLOOR | LIP | TOTAL |
|---|---|---|---|---|
| 12 | 0.3 | 0.4 | 0.2 | 0.9 |
| 15 | 0.4 | 0.6 | 0.2 | 1.2 |
| 18 | 0.5 | 0.7 | 0.2 | 1.4 |
| 21 | 0.6 | 0.8 | 0.3 | 1.7 |
| 24 | 0.7 | 1.0 | 0.3 | 2.0 |
| 30 | 1.0 | 1.3 | 0.3 | 2.6 |
| 36 | 1.3 | 1.7 | 0.4 | 3.4 |
| 42 | 1.7 | 2.1 | 0.5 | 4.3 |

## GRATE DIMENSION & MATERIALS TABLE

| NOMINAL SIZE DIA. (IN.) | IN INCHES DIMENSIONS A' | * c X | Y | Z | BAR SIZES B-1 | B-2 | B-3 | B-4 |
|---|---|---|---|---|---|---|---|---|
| 12 | 48 | 19 3/16 | 65 1/8 | 19 5/16 | 1x1/4 | 1 1/4x1/4 | 1 1/4x1 1/4x1/4 | 1x1/4x9 |
| 15 | 54 1/4 | 23 3/4 | 78 5/8 | 24 1/2 | 1x1/4 | 1 1/4x1/4 | 1 1/4x1 1/4x1/4 | 1x1/4x9 |
| 18 | 60 1/2 | 28 3/8 | 88 5/8 | 29 7/16 | 1x1/4 | 1 1/4x1/4 | 1 1/4x1 1/4x1/4 | 1x1/4x9 |
| 21 | 66 3/4 | 32 15/16 | 100 3/4 | 34 7/8 | 1x1/4 | 1 1/4x1/4 | 1 1/4x1 1/4x1/4 | 1x1/4x9 |
| 24 | 73 | 37 9/16 | 114 5/8 | 40 3/4 | 1x1/4 | 1 1/4x1/4 | 1 1/4x1 1/4x1/4 | 1x1/4x9 |
| 30 | 85 1/2 | 46 3/4 | 135 1/2 | 50 7/8 | 1 1/4x1/4 | 1 1/2x1/4 | 1 1/2x1 1/2x1/4 | 1 1/2x1/4x9 |
| 36 | 98 | 55 7/8 | 158 | 61 1/8 | 1 1/2x1/4 | 1 3/4x1/4 | 1 3/4x1 3/4x1/4 | 1 3/4x1/4x9 |
| 42 | 110 1/2 | 65 1/16 | 182 | 72 1/16 | 1 3/4x1/4 | 2 1/4x3/8 | 2 1/4x2 1/2x3/8 | 2 1/4x3/8x9 |

* c ALLOW 3/4"-1" EXTRA BAR LENGTH FOR HOLE FABRICATION

## HEADWALL DIMENSION TABLE

| NOMINAL SIZE DIA. (IN.) | IN INCHES D/24 | A | B | H | L | M | N | P | Q | U | V |
|---|---|---|---|---|---|---|---|---|---|---|---|
| 12 | 1/2 | 49 | 20 3/8 | 21 | 24 5/8 | 61 | 21 | 27 1/2 | 22 1/2 | 15 7/8 | 89 3/4 |
| 15 | 5/8 | 55 1/4 | 23 1/8 | 24 1/4 | 28 7/8 | 67 1/4 | 24 1/4 | 30 7/8 | 26 5/8 | 18 5/8 | 101 1/2 |
| 18 | 3/4 | 61 1/2 | 25 7/8 | 27 1/2 | 33 1/8 | 73 1/2 | 27 1/2 | 34 1/4 | 30 7/8 | 21 1/4 | 113 1/4 |
| 21 | 7/8 | 67 3/4 | 28 5/8 | 30 3/4 | 37 3/8 | 79 3/4 | 30 3/4 | 37 5/8 | 35 1/8 | 24 | 125 |
| 24 | 1 | 74 | 31 3/8 | 34 | 41 5/8 | 86 | 34 | 41 | 39 3/8 | 26 3/4 | 136 3/4 |
| 30 | 1 1/4 | 86 1/2 | 36 3/4 | 40 1/2 | 50 1/8 | 98 1/2 | 40 1/2 | 47 3/4 | 47 7/8 | 32 1/4 | 160 |
| 36 | 1 1/2 | 99 | 42 1/4 | 47 | 58 5/8 | 111 | 47 | 54 1/2 | 56 3/8 | 37 5/8 | 183 1/2 |
| 42 | 1 3/4 | 111 3/4 | 47 5/8 | 53 1/2 | 67 1/8 | 123 1/2 | 53 1/2 | 61 1/4 | 64 7/8 | 43 1/8 | 207 |

## METAL REINFORCEMENT TABLE

| BAR | NOMINAL PIPE SIZE DIAMETER (IN.) 12 NO./LGTH. | | 15 NO./LGTH. | | 18 NO./LGTH. | | 21 NO./LGTH. | | 24 NO./LGTH. | | 30 NO./LGTH. | | 36 NO./LGTH. | | 42 NO./LGTH. | |
|---|---|---|---|---|---|---|---|---|---|---|---|---|---|---|---|---|
| F-1 | 1 | 71 7/8 | 1 | 80 | 1 | 90 | 1 | 98 | 1 | 106 | 1 | 124 | 1 | 143 | 2 | 145/175 |
| H-1A | 2 | 100 | 2 | 115 | 2 | 129 | 2 | 149 | 2 | 160 | 2 | 189 | 2 | 218 | 2 | 248 |
| H-1B | 2 | 25 | 2 | 30 | 4 | 34 | 4 | 38 | 4 | 43 | 4 | 52 | 4 | 58 | 6 | 67 |
| H-1C | 1 | 22 | 1 | 28 | 2 | 22/25 | 2 | 22/23 | 2 | 22/28 | 2 | 22/32 | 2 | 21/36 | 3 | 29/20/40 |
| L-1 | 2 | 85 7/8 | 2 | 100 | 2 | 109 | 2 | 121 | 2 | 132 3/4 | 2 | 156 | 2 | 179 | 2 | 202 |
| L-2 | 2 | 19 | 2 | 19 | 2 | 19 | 2 | 19 | 2 | 19 | 2 | 19 | 2 | 19 | 2 | 19 |
| W-1A | 4 | 61 3/4 | 4 | 68 3/4 | 4 | 74 3/4 | 4 | 81 1/2 | 3 | 87 1/2 | 3 | 100 1/2 | 4 | 114 | 4 | 127 |
| W-1B | 0 | N/A | 0 | N/A | 2 | N/A | 2 | 49 | 2 | 53 | 2 | 59 | 2 | 66 | 2 | 68 |
| W-1C | 0 | N/A | 0 | N/A | 2 | 34 | 2 | 34 | 2 | 35 | 2 | 40 | 2 | 43 | 2 | 47 |
| W-2 | 4 | 25 | 4 | 28 1/2 | 4 | 32 | 4 | 35 1/4 | 4 | 38 1/4 | 6 | 44 3/4 | 6 | 51 | 6 | 57 1/2 |
| TOT. WT. | 51 lbs. | | 58 lbs. | | 72 lbs. | | 81 lbs. | | 86 lbs. | | 105 lbs. | | 126 lbs. | | 158 lbs. | |

## NOTES

1. THIS HEADWALL SHALL BE USED ONLY WHEN PROTECTED BY GUARDRAIL OR INSTALLED OUTSIDE THE CLEAR ZONE.
2. CAST-IN-PLACE HEADWALLS SHALL CONFORM TO SECTION 609 - MINOR STRUCTURES, OF THE CURRENT ITD STANDARD SPECIFICATIONS FOR HIGHWAY CONSTRUCTION.
3. THE METAL REINFORCEMENT SHALL BE NO. 4 BARS. ALL REINFORCEMENT SHALL HAVE A MINIMUM CONCRETE COVER OF 2" AND 3" MINIMUM COVER IF CAST AGAINST EARTH.
4. ALL EDGES TO HAVE 3/4" CHAMFER OR TOOLED EDGES.
5. ALL PIPE CULVERTS WITH A CONCRETE HEADWALL SHALL HAVE THE INLET HEADWALLS BEVELED. USE ENTRANCE LOSS COEFFICIENT $K_e$= 0.2 FOR BEVELED ENTRANCES.
6. THE METAL FOR THE GRATE SHALL MEET THE REQUIREMENTS OF ASTM A 36. WELDING OF THE METAL GRATE SHALL MEET THE REQUIREMENTS OF THE AMERICAN WELDING SOCIETY D1.1. GRATES FOR INLET HEADWALLS WILL BE REQUIRED ONLY WHEN SHOWN ON THE ROADWAY PLANS. GRATES NEED NOT BE PAINTED OR GALVANIZED.
7. USE CONCRETE, METAL, OR PLASTIC PIPE WITH HEADWALL.
8. NOT TO SCALE.

PROFESSIONAL ENGINEER * LAND SURVEYOR REGISTERED 2240 3/4/05 STATE OF IDAHO MILFORD MILLER

| REVISIONS | | | | | | | | |
|---|---|---|---|---|---|---|---|---|
| NO. | DATE | BY | NO. | DATE | BY | NO. | DATE | BY |
| 1 | 2-68 | | 6 | 12-92 | TMR | | | |
| 2 | 9-68 | | 7 | 10-01 | MSM | | | |
| 3 | 10-69 | | 8 | 6-03 | MSM | | | |
| 4 | 4-90 | GB | 9 | 3-05 | MSM | | | |
| 5 | 3-92 | MSM | | | | | | |

SCALES SHOWN ARE FOR 11" X 17" PRINTS ONLY

CADD FILE NAME d7__0305.std

DRWG. ORIG. DATE: MAY, 1964

IDAHO TRANSPORTATION DEPARTMENT

BOISE IDAHO

ASSISTANT CHIEF ENGINEER (DEVELOPMENT)

CHIEF ENGINEER

STANDARD DRAWING

CONCRETE HEADWALL FOR TWIN PIPE CULVERTS

REQUIRES SHEET 1 OF 2

English

STANDARD DRWG. NO. D-7

SHEET 2 OF 2