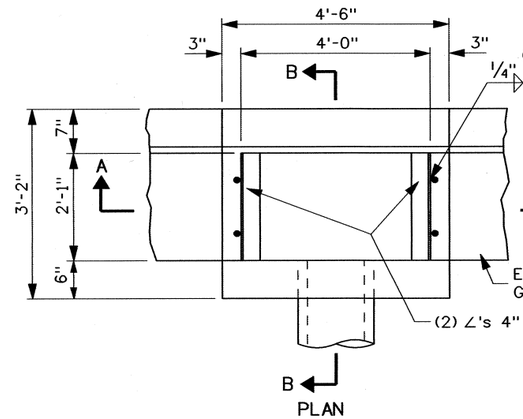

PLAN

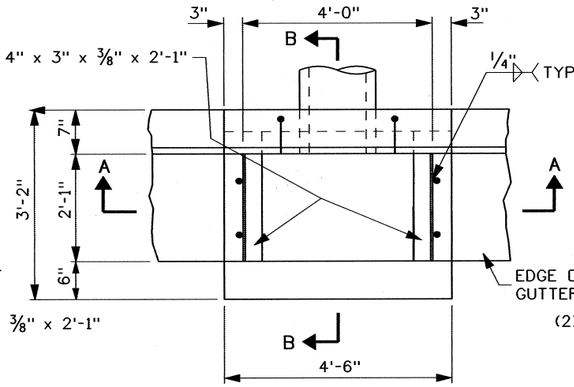

PLAN

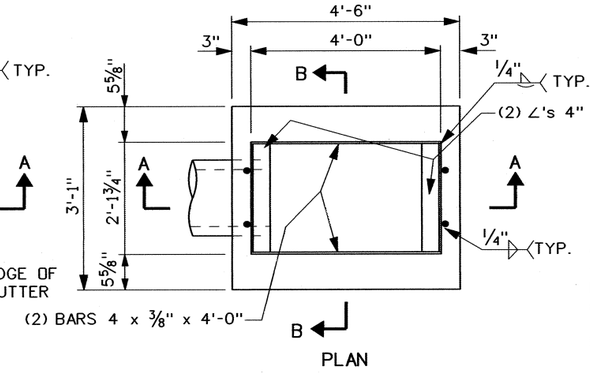

PLAN

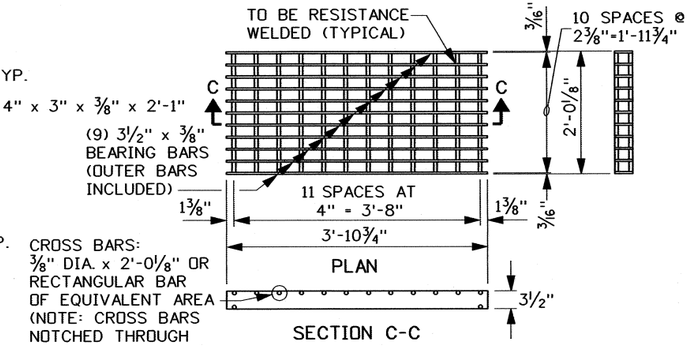

SECTION C-C

GRATE A (STEEL)

(WEIGHT : APPROXIMATELY 202 LBS., SEE NOTE NO. 9)

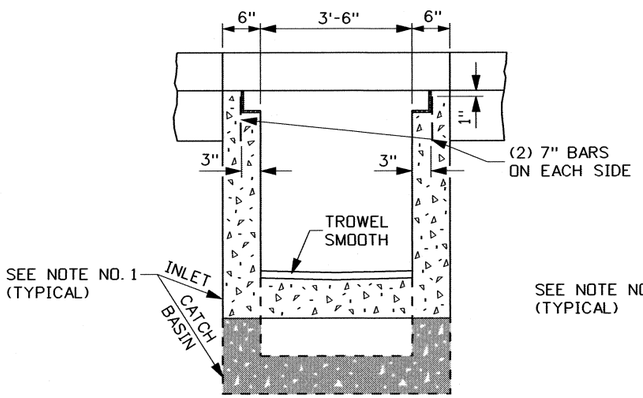

SECTION A-A

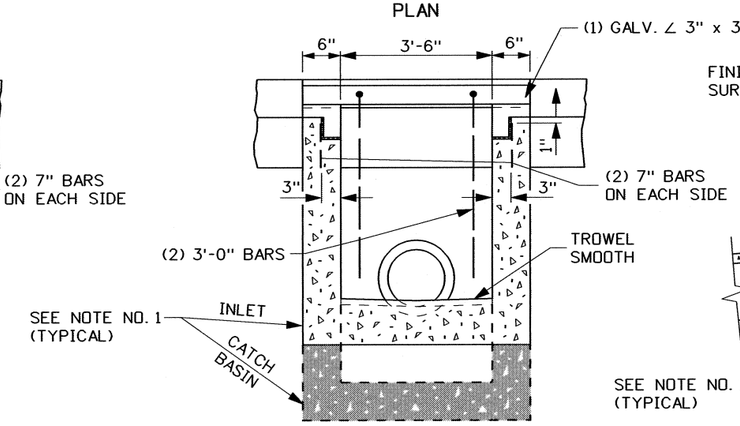

SECTION A-A

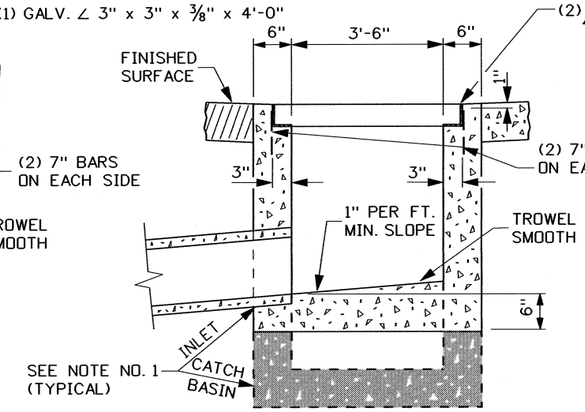

SECTION A-A

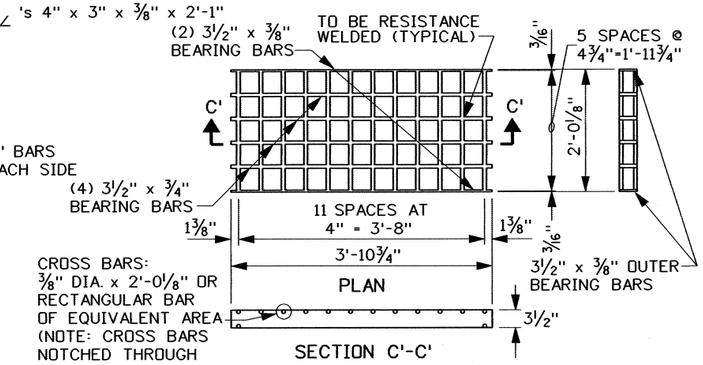

SECTION C'-C'

GRATE B (STEEL)

(WEIGHT: APPROXIMATELY 185 LBS., SEE NOTE NO. 9)

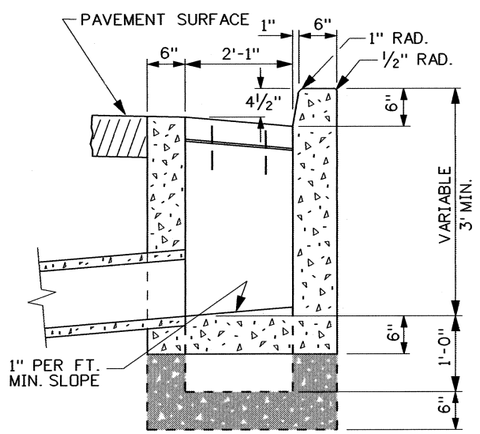

SECTION B-B

INLET - TYPE 1A
CATCH BASIN - TYPE 1A

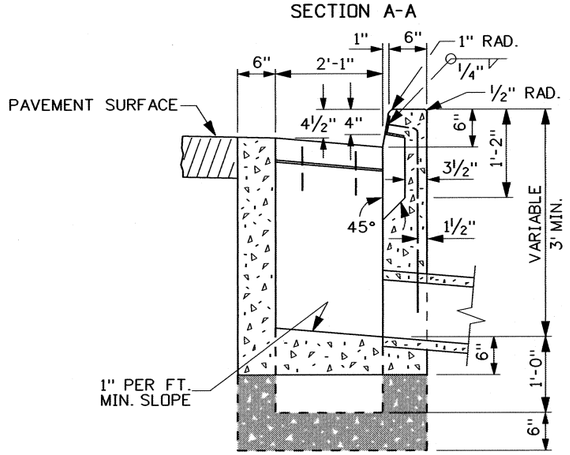

SECTION B-B

INLET - TYPE 2A
CATCH BASIN - TYPE 2A

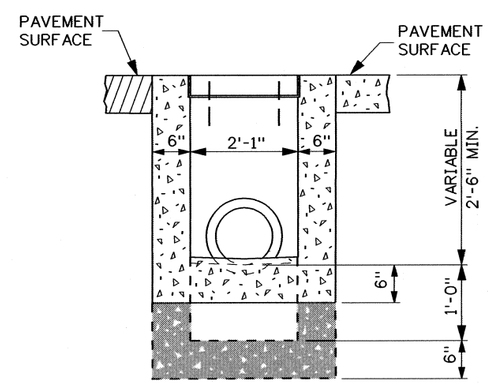

SECTION B-B

INLET - TYPE 3A
CATCH BASIN - TYPE 3A

NOTES

1. THE INLET BOTTOMS ARE DETAILED WITH BLACK SYMBOLS ON A WHITE BACKGROUND AND THE CATCH BASIN BOTTOMS ARE DETAILED WITH WHITE SYMBOLS ON A GREY BACKGROUND, I.E. BOX INLETS , CATCH BASINS .
2. INLETS AND CATCH BASINS MAY BE EITHER PRECAST OR CAST-IN-PLACE. PRECAST UNITS SHALL MEET THE REQUIREMENTS OF ASTM C478. (PRIOR APPROVAL OF SHOP DRAWINGS WILL BE REQUIRED ON MODIFIED UNITS.)
3. A 1" SIDE DRAFT IS ALLOWED FOR FORM REMOVAL.
4. CAST-IN-PLACE INLETS AND CATCH BASINS SHALL CONFORM TO SECTION 609 - MINOR STRUCTURES OF THE CURRENT ITD STANDARD SPECIFICATIONS FOR HIGHWAY CONSTRUCTION.
5. THE GRADE LINE OF THE TOP INSIDE OF ANY PIPE SHALL ENTER AT A POINT NO LOWER THAN THE TOP INSIDE OF THE OUTLET PIPE.
6. PIPES CAN ENTER OR LEAVE THE BOX IN ANY DIRECTION. ALL CONNECTIONS AND BROKEN AREAS SHALL BE GROUTED SMOOTH.
7. STEEL ANGLES SHALL BE SET SO THAT EACH BEARING BAR OF PREFABRICATED GRATE SHALL HAVE FULL BEARING ON BOTH ENDS. THE FINISHED TOP OF CONCRETE SHALL BE EVEN WITH THE ANGLE/GRATE SURFACE. THE STRUCTURAL STEEL NEED NOT BE PAINTED BUT SHALL MEET THE REQUIREMENTS OF ASTM A36.
8. ALL METAL REINFORCEMENT USED SHALL BE NO. 4 BARS. THE METAL REINFORCEMENT SHALL BE SMOOTH CUT TO ACCOMMODATE PIPES.
9. GRAY IRON CAST TO THE DIMENSIONS GIVEN FOR THE STEEL GRATES MAY BE USED. THE CASTINGS SHALL CONFORM TO AASHTO M306 CLASS 35B GRAY IRON CASTINGS.
10. GRATE B WILL BE USED ONLY WHEN SPECIFIED.
11. NOT TO SCALE.

REVISIONS								
NO.	DATE	BY	NO.	DATE	BY	NO.	DATE	BY
1	4-82		6	11-04	MSM			
2	1-89		7	5-07	MSM			
3	12-94	MSM						
4	6-97	MSM						
5	3-01	MSM						

SCALES SHOWN ARE FOR 11" X 17" PRINTS ONLY

CADD FILE NAME e6b_0507.std

DRWG. ORIG. DATE: OCTOBER, 1980

IDAHO TRANSPORTATION DEPARTMENT

BOISE IDAHO

ASSISTANT CHIEF ENGINEER (DEVELOPMENT)

CHIEF ENGINEER

STANDARD DRAWING

INLETS & CATCH BASINS TYPES 1A, 2A, & 3A

English

STANDARD DRWG. NO.

E-6-B

SHEET 1 OF 1

PROFESSIONAL ENGINEER * LAND SURVEYOR * REGISTERED 2240 5-15-07 STATE OF IDAHO MILFORD MILLER