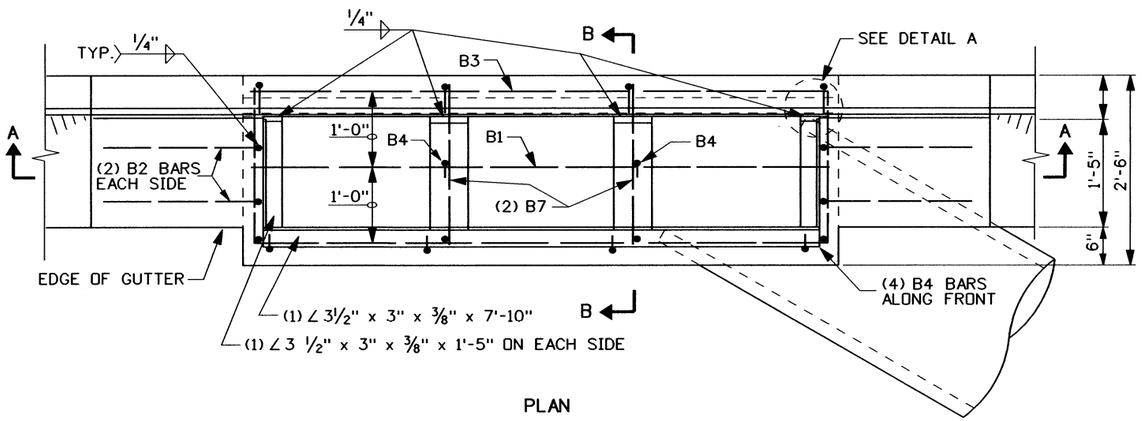

PLAN

BAR LIST					
MARK	LOCATION	SIZE	BAR LENGTH	NO.	SKETCH
B1	FLOOR	4	7'-6"	1	7'-6"
B2	WALLS	4	2'-9"	4	9" 2'-0"
B3	WALLS (ADD AS NEEDED)	4	20'-0"	4	2'-1" 1'-0" 7'-5" 7'-5" 2'-1"
B4	WALL & SUPPORTS	4	1'-0"	6	2½" 9½"
B5	WALLS & FLOOR (ADD LENGTH AS NEEDED)	4	6'-2"	4	4" 5'-10"
B6	WALLS & FLOOR (ADD LENGTH AS NEEDED)	4	5'-0"	4	5'-0"
B7	SUPPORTS	4	2'-2"	4	2'-2"
157.8 L.F. AT 0.668 LBS/FT. = 106 LBS					

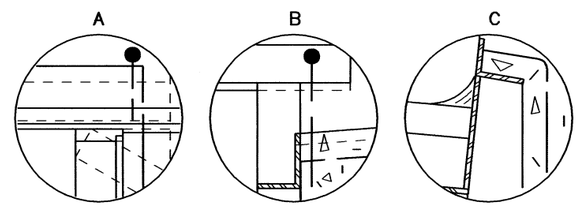

DETAILS A, B, & C

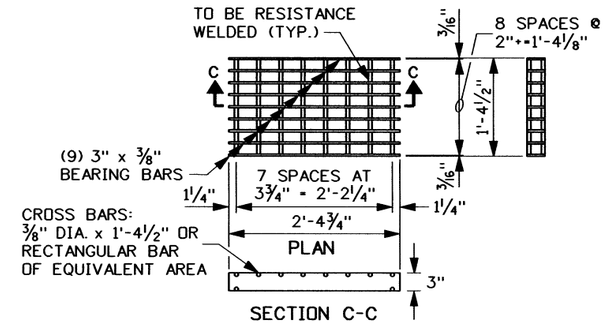

GRATE A (STEEL)

(WEIGHT : APPROXIMATELY 88 LBS., SEE NOTE NO. 9)

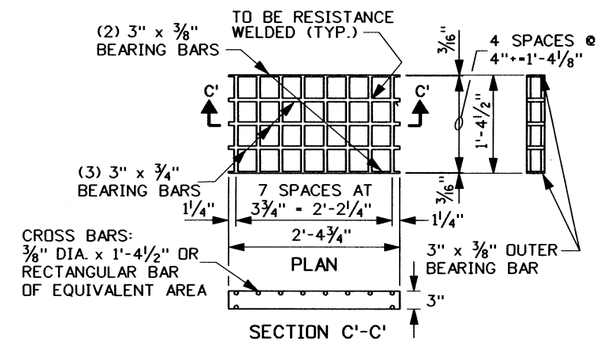

GRATE B (STEEL)

(WEIGHT : APPROXIMATELY 79 LBS., SEE NOTE NO. 9)

NOTES

1. INLETS AND CATCH BASINS MAY BE EITHER PRECAST OR CAST-IN-PLACE. PRECAST UNITS SHALL MEET THE REQUIREMENTS OF ASTM C478. PRIOR APPROVAL OF THE SHOP DRAWING WILL BE REQUIRED ON PRECAST UNITS.
2. A 1" SIDE DRAFT IS ALLOWED FOR FORM REMOVAL.
3. CAST-IN-PLACE INLETS AND CATCH BASINS SHALL CONFORM TO SECTION 609 - MINOR STRUCTURES OF THE CURRENT ITD STANDARD SPECIFICATIONS FOR HIGHWAY CONSTRUCTION.
4. THE GRADE LINE OF THE TOP INSIDE OF ANY PIPE SHALL ENTER AT A POINT NO LOWER THAN THE TOP INSIDE OF THE OUTLET PIPE.
5. PIPES CAN ENTER OR LEAVE THE BOX IN ANY DIRECTION. ALL CONNECTIONS AND BROKEN AREAS SHALL BE GROUTED SMOOTH.
6. STEEL ANGLES SHALL BE SET SO THAT EACH BEARING BAR OF PREFABRICATED GRATE SHALL HAVE FULL BEARING ON BOTH ENDS. THE FINISHED TOP OF CONCRETE SHALL BE EVEN WITH THE ANGLE/GRATE SURFACE. THE STRUCTURAL STEEL NEED NOT BE PAINTED BUT SHALL MEET THE REQUIREMENTS OF ASTM A36.
7. ALL METAL REINFORCEMENT SHALL BE NO. 4 BARS. METAL REINFORCEMENT SHALL BE SMOOTH CUT TO FIT AROUND PIPES. VERTICAL BARS B5 & B6 NEED TO LENGTHENED TO ACCOMMODATE CATCH BASINS DEEPER THAN 6'-4".
8. GRATE B WILL BE USED ONLY WHEN SPECIFIED.
9. GRAY IRON CAST TO THE DIMENSIONS GIVEN FOR THE STEEL GRATES MAY BE USED. THE CASTINGS SHALL CONFORM TO AASHTO M306 CLASS 35B GRAY IRON CASTINGS.
10. NOT TO SCALE.

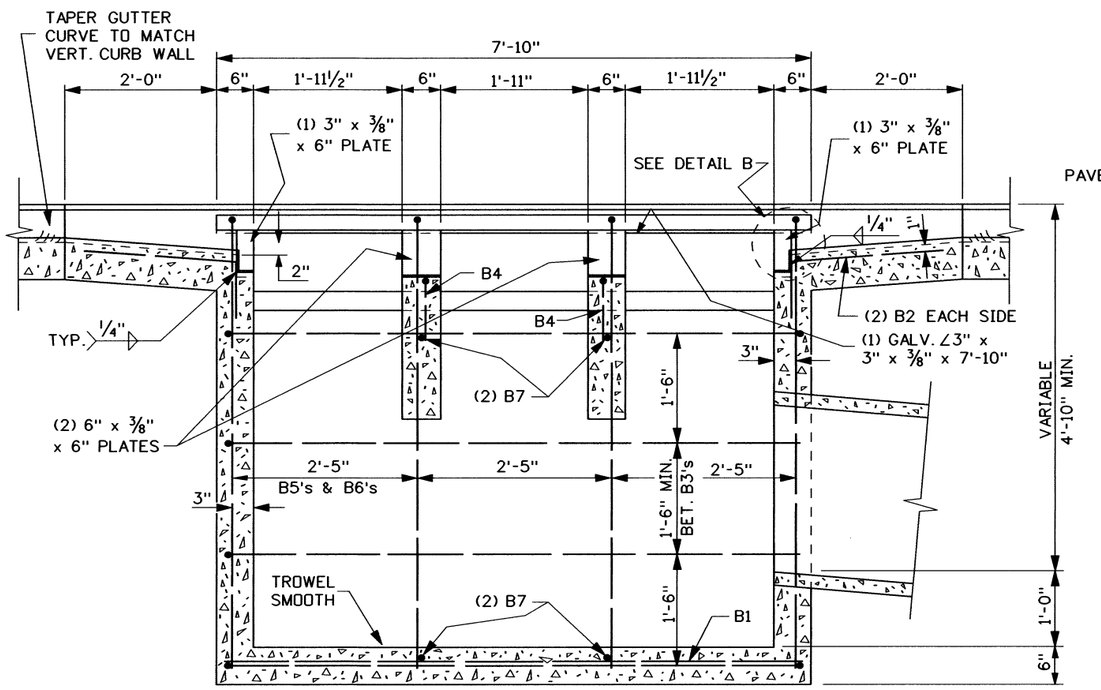

SECTION A-A

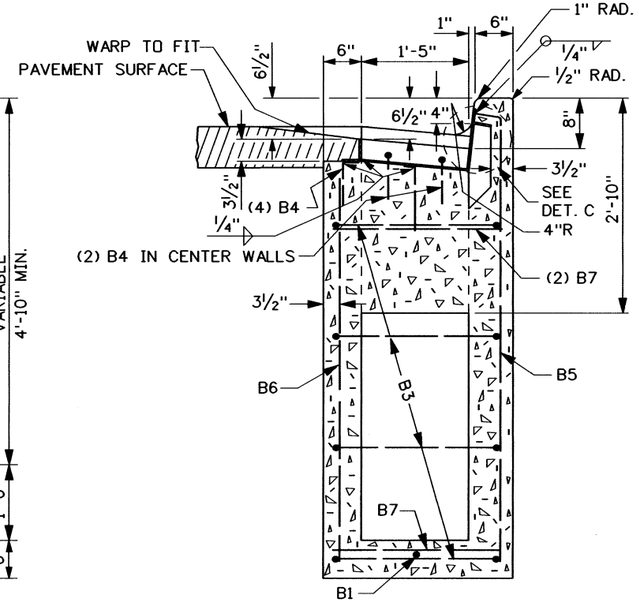

SECTION B-B

CATCH BASIN - DETAILS

REVISIONS								
NO.	DATE	BY	NO.	DATE	BY	NO.	DATE	BY
1	10-80		6	3-01	MSM			
2	4-82		7	12-04	MSM			
3	3-84		8	5-07	MSM			
4	1-89							
5	12-94	MSM						

SCALES SHOWN ARE FOR 11" X 17" PRINTS ONLY

CADD FILE NAME e6e_0507.std

DRWG. ORIG. DATE: OCTOBER, 1980

IDAHO TRANSPORTATION DEPARTMENT

BOISE IDAHO

ASSISTANT CHIEF ENGINEER (DEVELOPMENT)

CHIEF ENGINEER

STANDARD DRAWING

CATCH BASIN TYPE 7

English

STANDARD DRWG. NO.

E-6-E

SHEET 1 OF 1

PROFESSIONAL ENGINEER * LAND SURVEYOR REGISTERED 2240 5/16/07 STATE OF IDAHO MILFORD MILLER