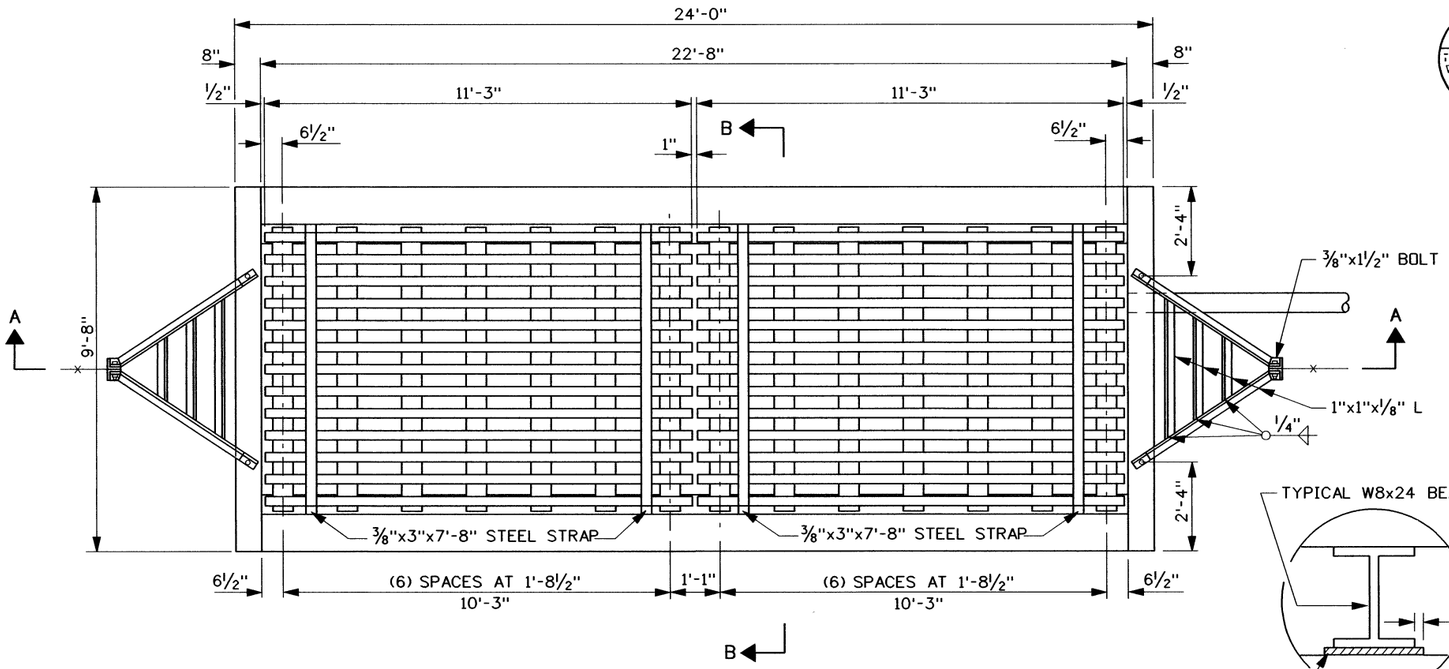

PLAN

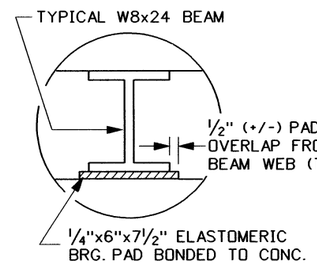

PAD DETAIL

(SEE NOTE NO. 4)

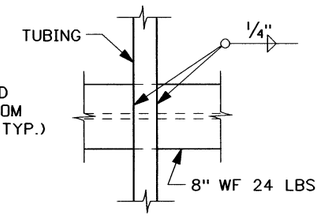

TYPICAL WELD DETAIL

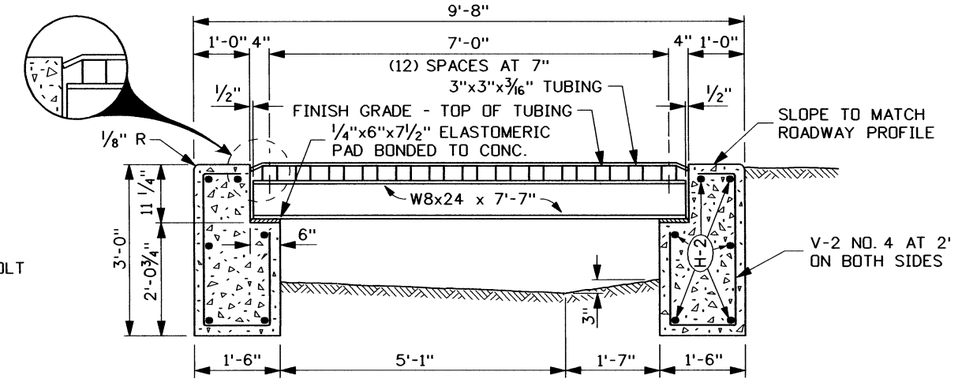

SECTION B-B

REINFORCEMENT STEEL				
MARK	LOCATION	SIZE NO.	BAR LENGTH	NO. REQ'D
V-1	END WALLS	4	2'-8"	18
V-2	SIDE WALLS	4	6'-0"	11
H-1	END WALLS	4	9'-4"	6
H-2	SIDE WALLS (TIE BARS)	4	23'-8"	12
454 LIN. FT. NO.4 BARS @ 0.668 LB./FT.= 304 LB.				

BILL OF MATERIALS	
CONCRETE, CLASS 30	8.2 C.Y.
METAL REINFORCEMENT	304 LBS
STRUCTURAL STEEL	4600 LBS

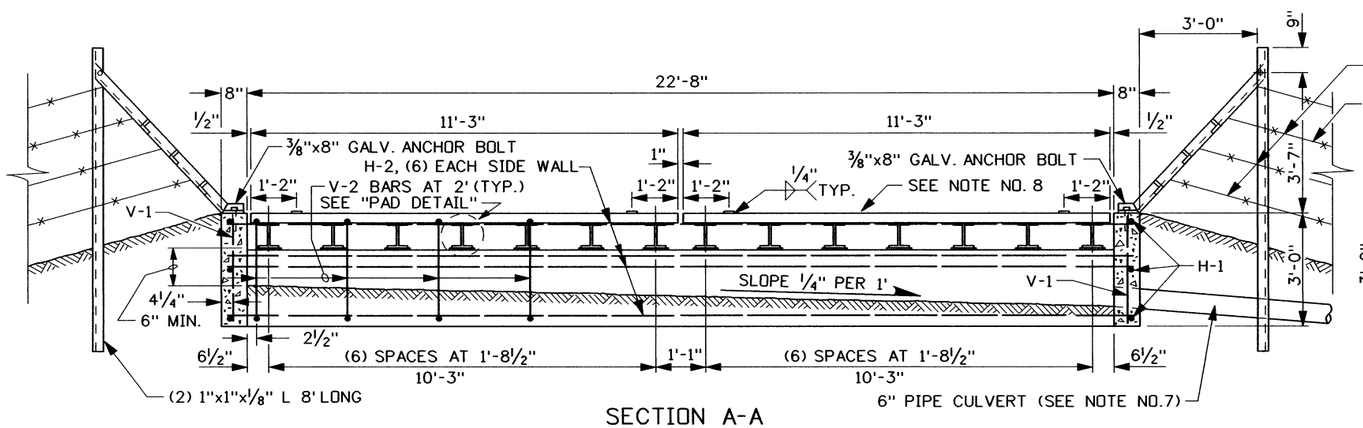

SECTION A-A

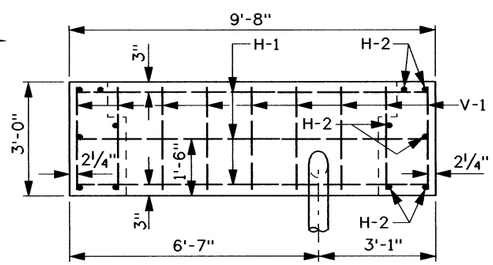

END VIEW

NOTES

1. THE ABOVE DETAILS SHOW REINFORCEMENT, RAIL, AND RAIL SUPPORT PLACEMENT ONLY.
2. ALL CATTLE GUARDS SHALL MEET THE REQUIREMENTS OF SECTION 611 - CATTLE GUARDS, STANDARD SPECIFICATIONS.
3. ALL THE EXPOSED STEEL SURFACES BELONGING TO THE CATTLE GUARD AND WINGS SHALL BE PAINTED WITH FORMULA NO. 10.
4. THE CATTLE GUARD AND SUPPORTS SHALL BE DESIGNED FOR HS-25 LOADING. THE ELASTOMERIC BEARING PADS SHALL BE 50 DUROMETER IN HARDNESS.
5. THE CATTLE GUARD SHALL BE PLACED ON BASE AGGREGATE 3" MINIMUM THICKNESS OVER HAND LEVELED SOIL COMPACTED TO 95% DENSITY.
6. ALL CATTLE GUARD HARDWARE FASTENERS SHALL BE GALVANIZED.
7. DRAINAGE SHALL BE PROVIDED AT THE TIME OF INSTALLATION SO THE CATTLE GUARD WILL DRAIN.
8. THE CATTLE GUARD SHALL BE PLACED TO MATCH THE ROADWAY SLOPE AND/OR THE ROADWAY CROWN.
9. COMMERCIAL AND/OR ALTERNATE CATTLE GUARD DESIGNS MAY BE USED UPON MEETING THE ABOVE REQUIREMENTS.
10. NOT TO SCALE.

REVISIONS								
NO.	DATE	BY	NO.	DATE	BY	NO.	DATE	BY
1	12-72		6	5-95	IJR			
2	12-73		7	1-00	MSM			
3	2-74		8	9-02	MSM			
4	3-81		9	10-05	MSM			
5	6-81							

SCALES SHOWN ARE FOR 11" X 17" PRINTS ONLY

CADD FILE NAME f1a_1005.std

DRWG. ORIG. DATE: JANUARY, 1971

IDAHO TRANSPORTATION DEPARTMENT

BOISE IDAHO

ASSISTANT CHIEF ENGINEER (DEVELOPMENT)

CHIEF ENGINEER

STANDARD DRAWING

CATTLE GUARD TYPE A

English

STANDARD DRWG. NO.

F-1-A

SHEET 1 OF 1

PROFESSIONAL ENGINEER * LAND SURVEYOR REGISTERED 2240 10/18/05 STATE OF IDAHO MILFORD MILLER