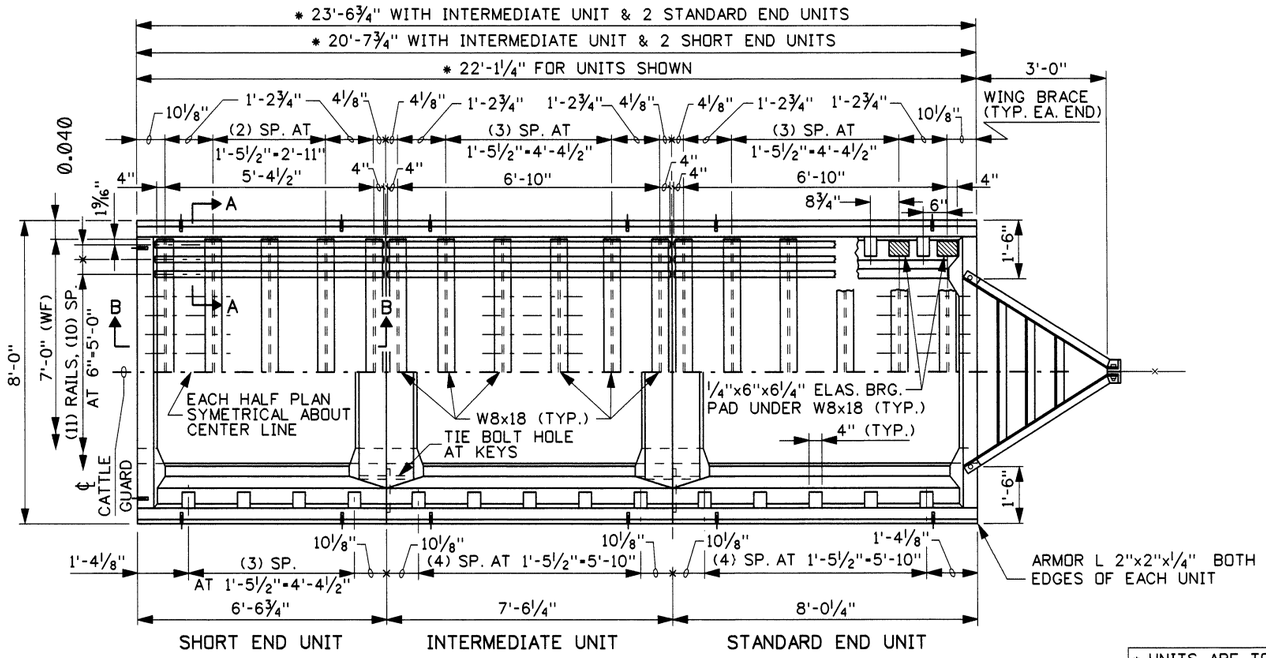

PART PLAN - CONCRETE, RAILS & RAIL SUPPORTS

* UNITS ARE TO BE FURNISHED AS REQUIRED BY THE SPECIFIED CATTLE GUARD WIDTH.

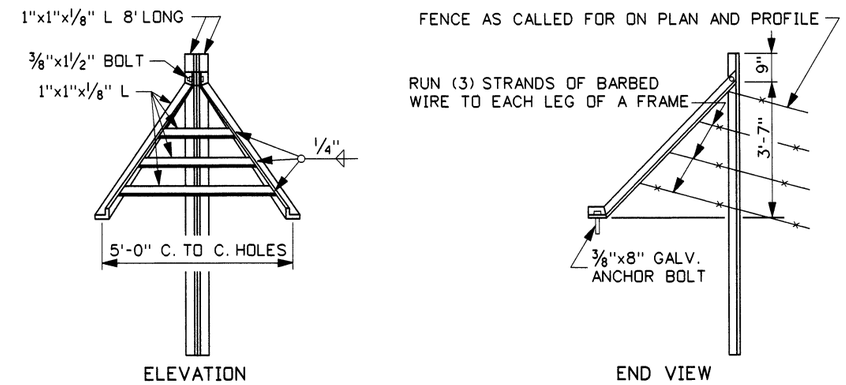

WING BRACE

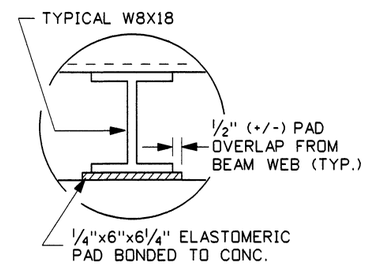

PAD DETAIL

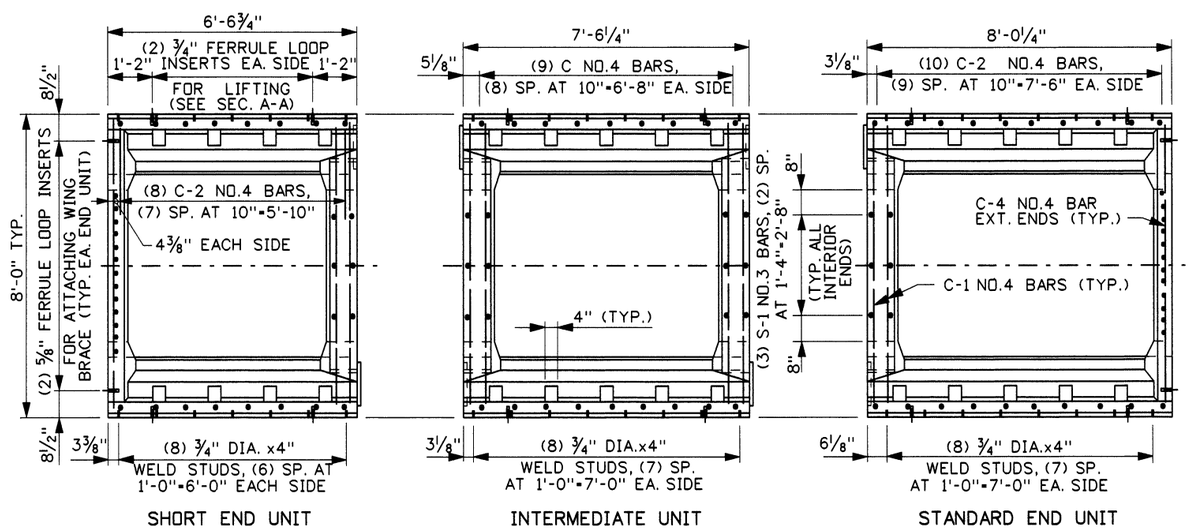

PLAN - WELD STUD, INSERT & METAL REINFORCEMENT PLACEMENT

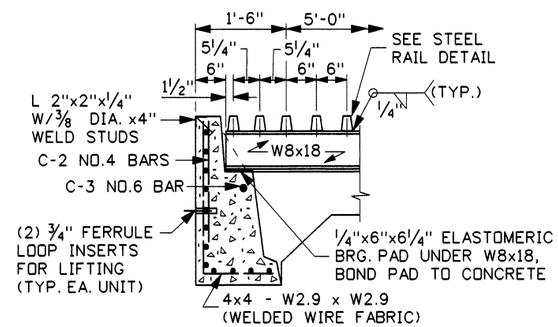

SECTION A-A

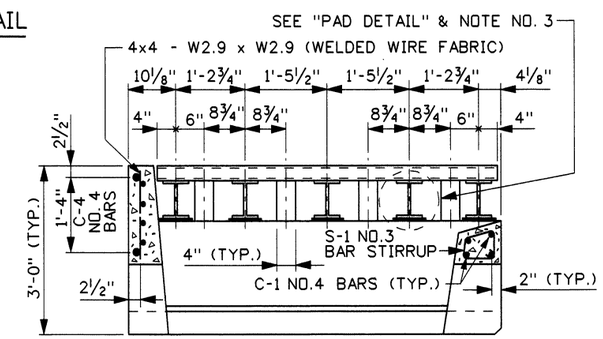

SECTION B-B

REVISIONS								
NO.	DATE	BY	NO.	DATE	BY	NO.	DATE	BY
1	7-02	MSM						
2	12-05	MSM						

SCALES SHOWN ARE FOR 11" X 17" PRINTS ONLY

CADD FILE NAME f1b_1205.std

DRWG. ORIG. DATE: MARCH, 1981

IDAHO TRANSPORTATION DEPARTMENT

BOISE IDAHO

ASSISTANT CHIEF ENGINEER (DEVELOPMENT)

CHIEF ENGINEER

STANDARD DRAWING

CATTLE GUARD TYPE B

REQUIRES SHEET 2 OF 2

English

STANDARD DRWG. NO.

F-1-B

SHEET 1 OF 2

PROFESSIONAL ENGINEER * LAND SURVEYOR REGISTERED 2240 12/19/05 STATE OF IDAHO MILFORD MILLER

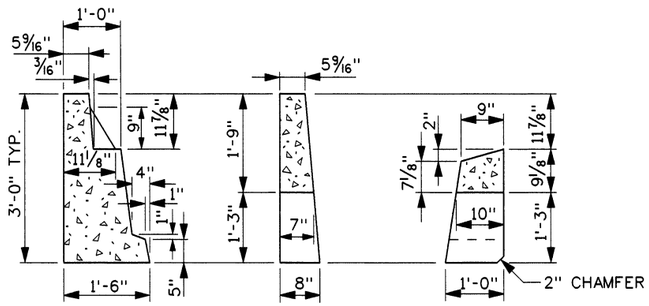

THE SECTIONS THRU SUPPORT WALLS GIVE DIMENSIONS FOR FORMING. SEE SECTIONS A-A & B-B ON PLAN VIEW ORENTATION.

SUPPORT DIMENSIONS

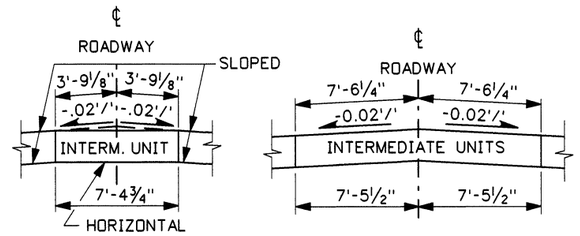

TWO TYPES OF COMBINATIONS OF BEVELED INTERMEDIATE UNITS

ROADWAY SECTIONS

SUPPORT REINFORCEMENT TABLE								
MARK	BAR SIZE	NO. PER UNIT			LENGTH PER UNIT			SKETCH
		INTER. UNIT	STD. END	SHORT END	INTER. UNIT	STD. END	SHORT END	
C-1	NO. 4	8	4	4	7'-9"	7'-9"	7'-9"	
C-2	NO. 4	18	20	16	1'-9"	1'-9"	1'-9"	
C-3	NO. 6	2	2	2	7'-3"	7'-9"	6'-3"	
C-4	NO. 4	-	2	2	-	7'-9"	7'-9"	
S-1	NO. 3	6	3	3	1'-9 5/8"	1'-9 5/8"	1'-9 5/8"	
W.W.F.	4x4-W2.9xW2.9	2	2	2	4'-0"x7'-3"	4'-0"x7'-9"	4'-0"x6'-3"	
W.W.F.	4x4-W2.9xW2.9	-	1	1	-	1'-6"x7'-9"	1'-6"x7'-9"	

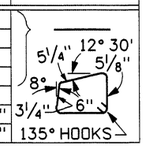

STRUCTURAL STEEL TABLE							
MARK	SIZE	NO. PER UNIT			LENGTH PER UNIT		
		INTER. UNIT	STD. END	SHORT END	INTERMED. UNIT	STANDARD END UNIT	SHORT END UNIT
WIDE FLG.	W8x18	6	6	5	7'-0"	7'-0"	7'-0"
RAIL	SEE D.	15	15	15	7'-6"	7'-6"	6'-0 1/2"
WELDSTUD	3/8" DIA.	16	16	14	4"	4"	4"
ARMOR L	2x2x1/4"	2	2	2	7'-6 1/4"	8'-6 1/4"	6'-6 3/4"
WING BRACE							
ANGLE	1x1x1/8"	WING FRAME			4 REQ'D	21'-1" TOTAL	
ANGLE	1x1x1/8"	WING FILLER			6 REQ'D	16'-6" TOTAL	
POST L	1x1x1/8"	WING SUPPORT			4 REQ'D	VARIES APPR. 8'-0"	
PLATE	3x5 1/2x1/8	WING FRAME TIE			2 REQ'D	TOTAL L = 37'-9"	

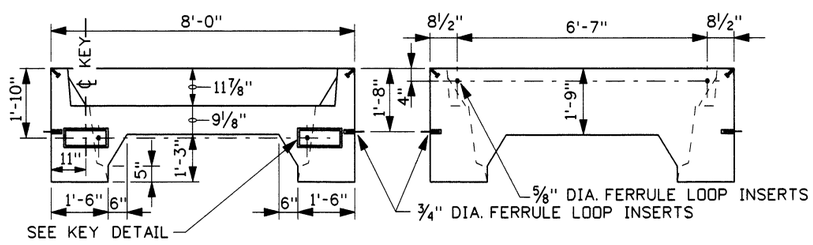

TYPICAL VIEW OF INTERIOR END

TYPICAL VIEW OF INTERIOR END

END VIEWS

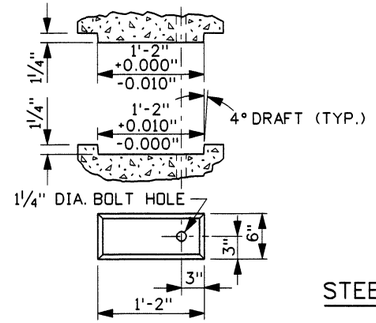

KEY DETAILS

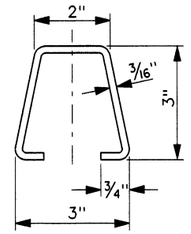

STEEL RAIL DETAIL

NOTES

1. THE ABOVE SECTIONS SHOW REINFORCEMENT, RAIL, AND RAIL SUPPORT PLACEMENT ONLY.
2. ALL CATTLE GUARDS SHALL MEET THE REQUIREMENTS OF SECTION 611 - CATTLE GUARDS OF THE STANDARD SPECIFICATIONS.
3. THE CATTLE GUARD AND SUPPORTS SHALL BE DESIGNED FOR HS-25 LOADING. THE ELASTOMERIC BEARING PADS SHALL BE 50 DUROMETER IN HARDNESS.
4. THE CATTLE GUARD SHALL BE PLACED ON BASE AGGREGATE 3" MIN. THICKNESS OVER HAND LEVELED SOIL COMPACTED TO 95% DENSITY.
5. CATTLE GUARD EXPOSED STEEL MEMBERS AND HARDWARE SHALL BE GALVANIZED.
6. DRAINAGE SHALL BE PROVIDED AT THE TIME OF INSTALLATION SO THE CATTLE GUARD WILL DRAIN.
7. THE CATTLE GUARD SHALL BE PLACED TO MATCH THE ROADWAY SLOPE AND/OR THE CROWN.
8. COMMERCIAL OR ALTERNATE CATTLE GUARD DESIGNS MAY BE USED UPON MEETING THE ABOVE REQUIREMENTS.
9. ALL DETAILS SHOWN ARE NOT DRAWN TO ANY SCALE.
10. NOT TO SCALE.

REVISIONS								
NO.	DATE	BY	NO.	DATE	BY	NO.	DATE	BY
1	7-02	MSM						
2	12-05	MSM						

SCALES SHOWN ARE FOR 11" X 17" PRINTS ONLY

CADD FILE NAME f1b_1205.std

DRWG. ORIG. DATE: MARCH, 1981

IDAHO TRANSPORTATION DEPARTMENT

BOISE IDAHO

ASSISTANT CHIEF ENGINEER (DEVELOPMENT)

CHIEF ENGINEER

STANDARD DRAWING

CATTLE GUARD TYPE B

REQUIRES SHEET 1 OF 2

English

STANDARD DRWG. NO.

F-1-B

SHEET 2 OF 2

PROFESSIONAL ENGINEER * LAND SURVEYOR REGISTERED 2240 12/19/05 STATE OF IDAHO MILFORD MILLER