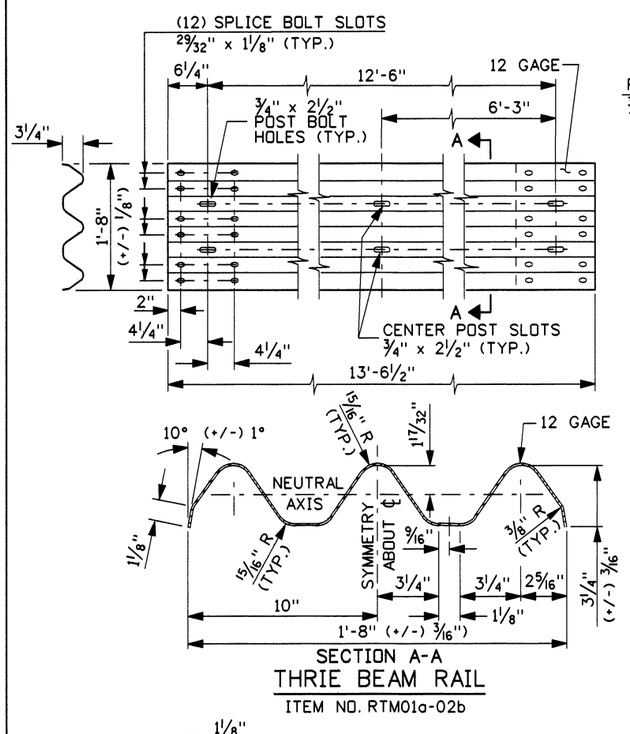

SECTION A-A

THRIE BEAM RAIL

ITEM NO. RTM01a-02b

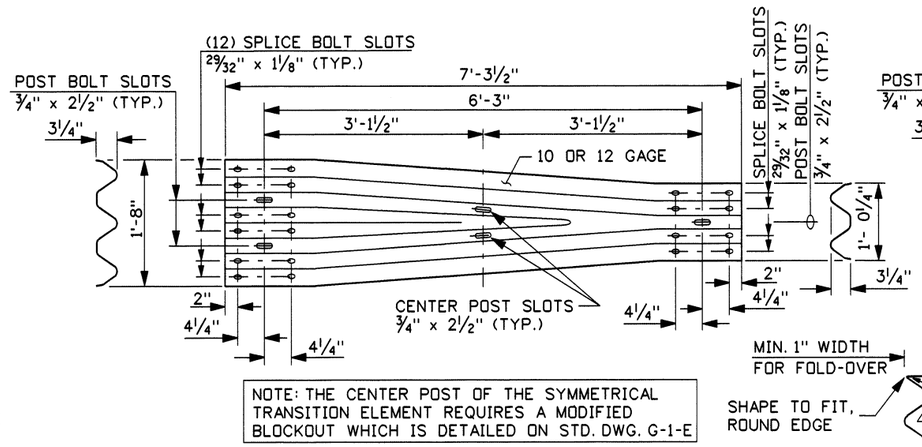

NOTE: THE CENTER POST OF THE SYMMETRICAL TRANSITION ELEMENT REQUIRES A MODIFIED BLOCKOUT WHICH IS DETAILED ON STD. DWG. G-1-E

SYMMETRICAL TRANSITION ELEMENT
(ITEM NO. RWT01a-b)

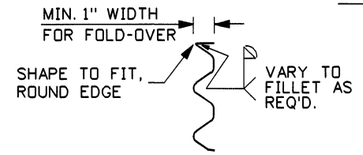

SECTION B-B

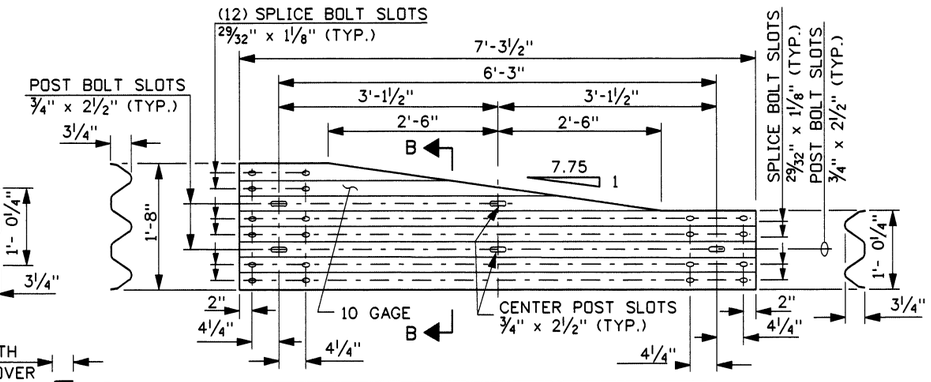

NOTE: THE CENTER POST OF THE ASYMMETRICAL TRANSITION ELEMENT REQUIRES THE TOP TO BE TRIMMED TO MATCH THE RAIL TOP

ASYMMETRICAL TRANSITION ELEMENT
(SEE NOTE NO. 7)

THRIE BEAM TO W-BEAM TRANSITION SECTIONS

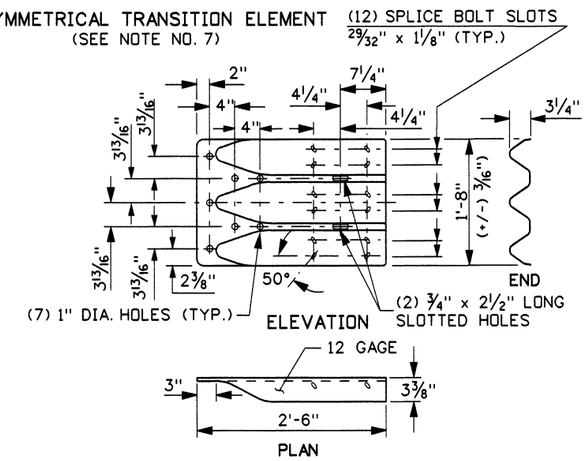

THRIE BEAM TERMINAL CONNECTOR DETAILS

(ITEM NO. RTE01b)

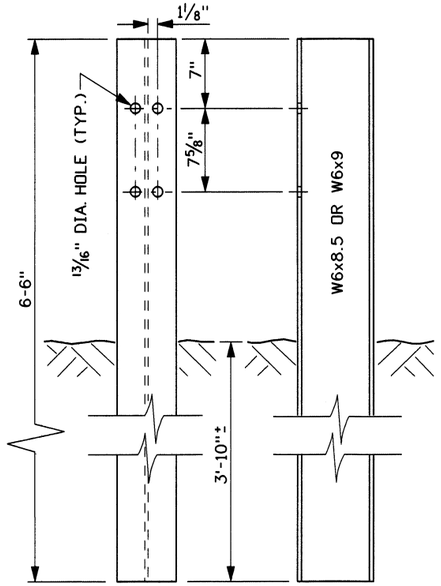

THRIE BEAM STANDARD STEEL POST

NCHRP 350,TL-3

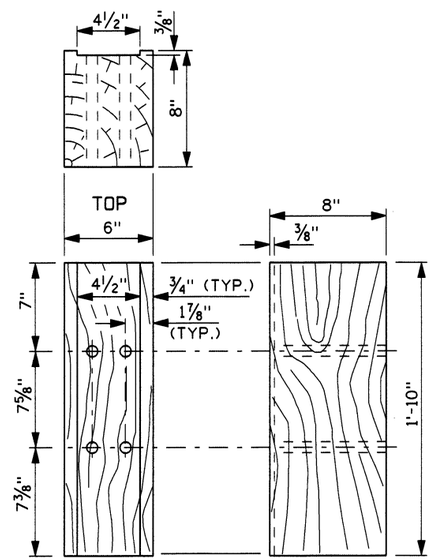

THRIE BEAM STEEL POST BLOCKOUT

NCHRP 350,TL-3

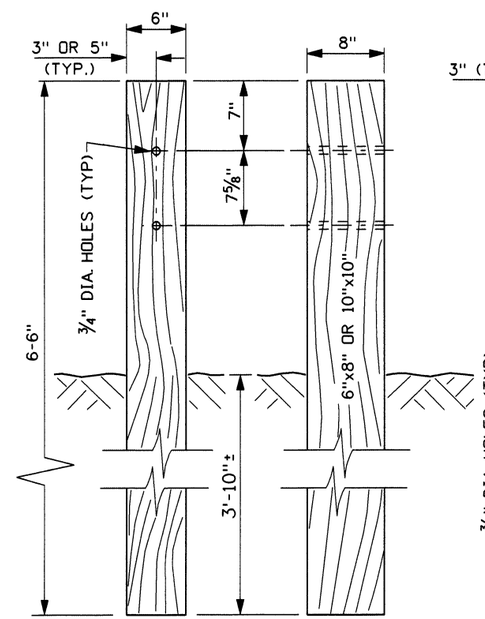

THRIE BEAM STANDARD WOOD POST

NCHRP 350,TL-3

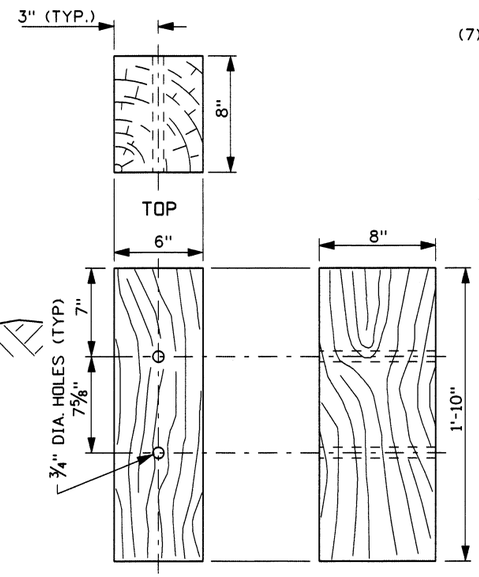

THRIE BEAM WOOD POST BLOCKOUT

NCHRP 350,TL-3

REVISIONS								
NO.	DATE	BY	NO.	DATE	BY	NO.	DATE	BY
1	5-07	MSM						

SCALES SHOWN ARE FOR 11" X 17" PRINTS ONLY

CADD FILE NAME g1a50507.std

DRWG. ORIG. DATE: MAY, 2006

IDAHO TRANSPORTATION DEPARTMENT

BOISE IDAHO

ASSISTANT CHIEF ENGINEER (DEVELOPMENT)

CHIEF ENGINEER

STANDARD DRAWING

THRIE BEAM GUARDRAIL

REQUIRES SHEET 2 OF 2

English

STANDARD DRWG. NO.

G-1-A-5

SHEET 1 OF 2

PROFESSIONAL ENGINEER * LANDSCAPE ARCHITECT * LAND SURVEYOR
MILFORD MILLER
2240
5-16-07
STATE OF IDAHO

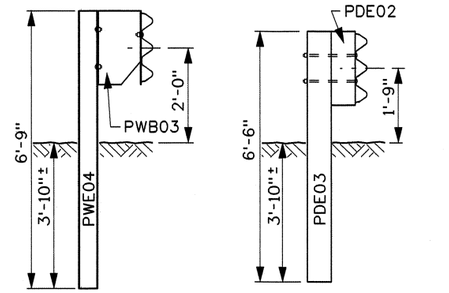

NCHRP 350, TL-4: 6'-9" LONG, W6x8.5 OR W6x9 STEEL POST WITH MODIFIED THRIE BEAM TAPERED BLOCKOUT

NCHRP 350, TL-3: 6'-6" LONG WOOD POST WITH THRIE BEAM WOOD BLOCKOUT

NCHRP 350 DETAILS

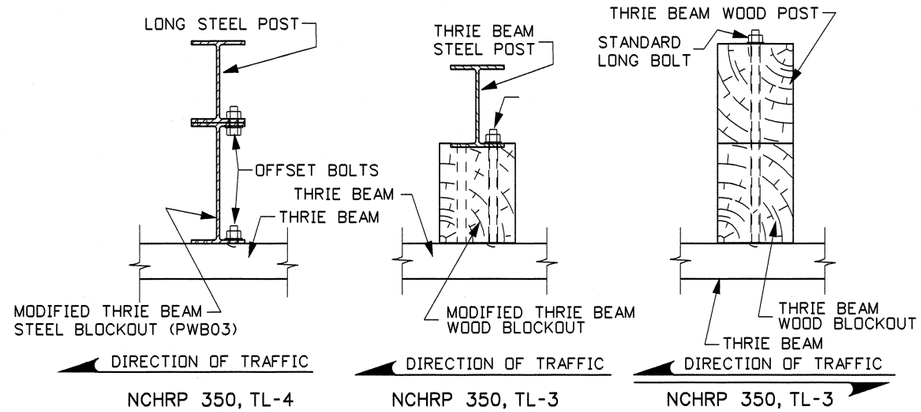

NCHRP 350, TL-4 NCHRP 350, TL-3 NCHRP 350, TL-3

THRIE BEAM BOLTING DETAILS

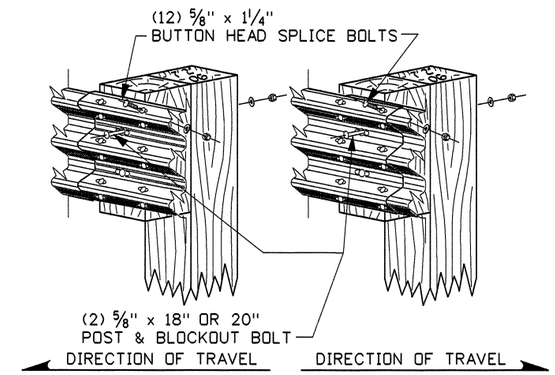

THRIE BEAM LAPPING DETAILS

(STANDARD WOOD POST INSTALLATION SHOWN)

SLOPE REQUIREMENTS (MINIMUM)
* a BALLAST SLOPE SAME AS FORESLOPE BUT NOT STEEPER THAN 2:1.
* b SEE NOTE NO. 11
USE OF CURB
* c SEE NOTE NO. 8

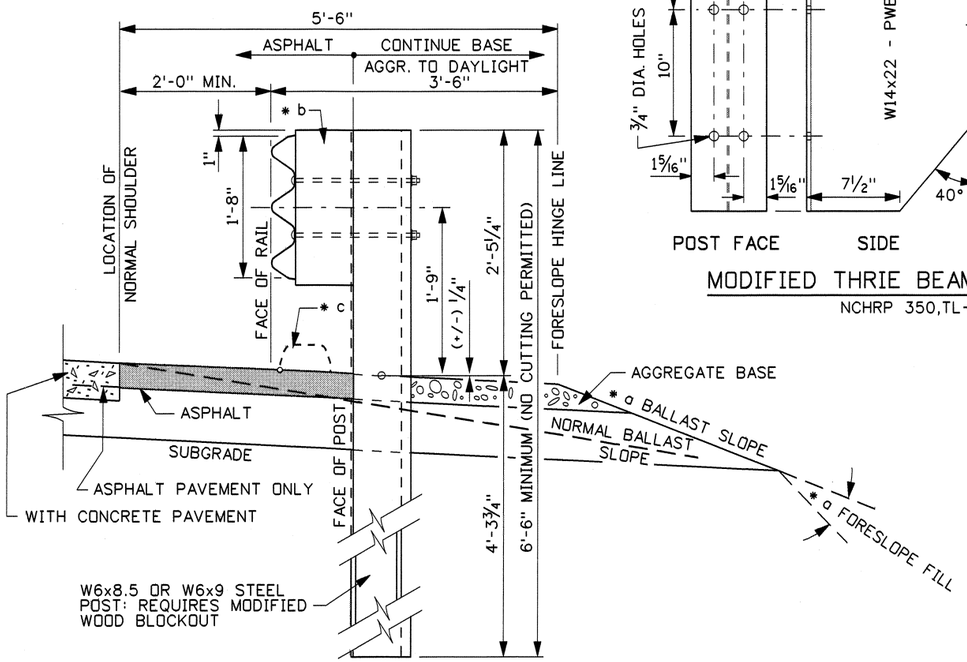

THRIE BEAM SLOPE TREATMENT - TYPE A INSTALLATION

(NCHRP 350,TL-3 SHOWN)

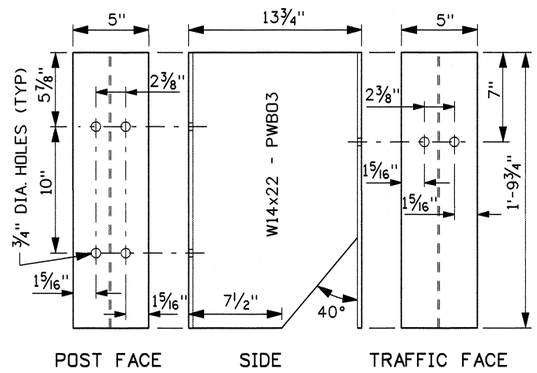

MODIFIED THRIE BEAM BLOCKOUT

NCHRP 350,TL-4

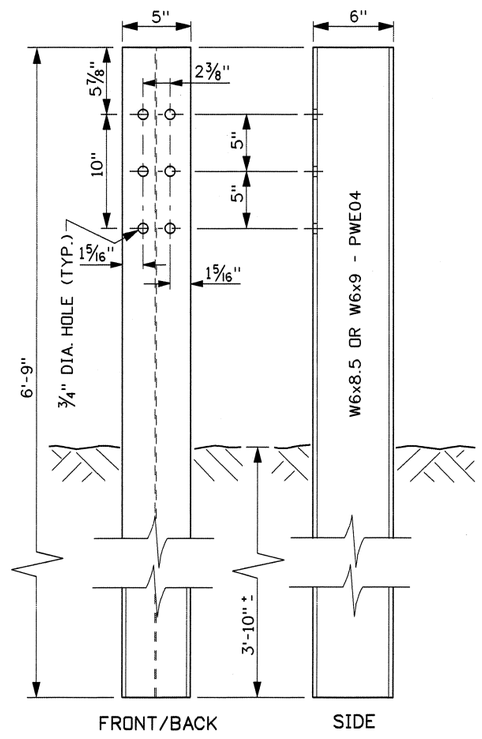

THRIE BEAM LONG STEEL POST

NCHRP 350,TL-4

NOTES

1. ALL GUARDRAIL AND ACCESSORIES SHALL CONFORM TO THE "A GUIDE TO STANDARDIZED HIGHWAY BARRIER HARDWARE".
2. THRIE BEAM RAIL AND TERMINAL SECTIONS SHALL BE GALVANIZED IN ACCORDANCE WITH AASHTO M180, CLASS A, TYPE 2 WITH THE EXCEPTION THAT ALL RAIL AND TERMINAL SECTIONS SHALL BE GALVANIZED AFTER FABRICATION WITH FABRICATION TO INCLUDE FORMING, CUTTING, SHEARING, PUNCHING, DRILLING, BENDING, WELDING, AND RIVETING.
3. NO TERMINAL HARDWARE OR TERMINAL ACCESSORY SHALL BE FIELD OR OTHERWISE MODIFIED. SLIGHT FIELD FITTING MODIFICATIONS ARE ALLOWED ON STANDARD GUARDRAIL INSTALLATIONS. ANY DRILLING, CUTTING (NOT BY HEAT), OR PUNCHING TO STANDARD GUARDRAIL ITEMS SHALL BE PAINTED WITH TWO COATS OF FORMULA 14-82 ZINC SILICATE PAINT.
4. TIMBER POSTS AND BLOCKS SHALL BE TREATED. REFER TO SECTION 710 - TIMBER AND PRESERVATIVES, OF THE "ITD STANDARD SPECIFICATIONS FOR HIGHWAY CONSTRUCTION".
5. ALL GUARDRAIL SHALL BE LAPPED IN THE DIRECTION OF THE NEAREST TRAFFIC LANE TO PREVENT SNAGGING.
6. THE THRIE BEAM ASYMMETRICAL TRANSITION ELEMENT (SEE NOTE NO. 5) SHALL BE FABRICATED FROM A RAW SECTION OF THIRE BEAM GUARDRAIL AND THE TAPERED TOP SHALL BE CUT WITH A METAL SAW (NOT WITH HEAT).
7. USE OF OTHER MANUFACTURER'S VERSIONS OF THE ASYMMETRICAL AND SYMMETRICAL THRIE BEAM TRANSITION SECTIONS AS SHOWN ARE ALLOWED; HOWEVER, THE OTHER VERSIONS SHALL HAVE THE SAME SLOT AND HOLE CONFIGURATION AND BE CONSTRUCTED OF A MINIMUM 10 GAGE GALVANIZED STEEL.
8. WHEN CURB IS CALLED FOR THE CURB FACE SHALL BE LOCATED ALONG THE FACE OF RAIL (SEE THE "TYPICAL CURB WITH GUARDRAIL INSTALLATION" DETAIL). REFER TO STANDARD DRAWING H-1 FOR CURB DETAILS.
9. WHEN STEEL GUARDRAIL POSTS ARE INSTALLED, THE DATE (MONTH & YEAR) AND POST LENGTH SHALL BE STAMPED IN A CONSPICUOUS PLACE NEAR THE TOP AND BETWEEN THE WEBS OF THE POST. THE CHARACTERS SHALL BE 1/4" TO 3/8" IN HEIGHT.
10. THRIE BEAM STEEL GUARDRAIL POSTS SHALL CONFORM TO THE "SPECIFICATIONS" OF THE WIDE-FLANGE GUARDRAIL POST (PWE01-04) IN THE "A GUIDE TO STANDARDIZED HIGHWAY BARRIER HARDWARE".
11. THRIE BEAM GUARDRAIL POSTS MAY BE WOOD OR STEEL. STEEL POSTS AND WOOD POSTS MAY HAVE ONLY WOOD BLOCKOUTS TO COMPLY WITH NCHRP 350, TL-3 REQUIREMENTS. NCHRP 350, TL-4 REQUIRES A 6'-9" STEEL POST AND THE MODIFIED THRIE BEAM (STEEL) BLOCKOUT.
12. NOT TO SCALE.

REVISIONS								
NO.	DATE	BY	NO.	DATE	BY	NO.	DATE	BY
1	5-07	MSM						

SCALES SHOWN ARE FOR 11" X 17" PRINTS ONLY

CADD FILE NAME g1a50507.std

DRWG. ORIG. DATE: MAY, 2006

IDAHO TRANSPORTATION DEPARTMENT

BOISE IDAHO

ASSISTANT CHIEF ENGINEER (DEVELOPMENT)

CHIEF ENGINEER

STANDARD DRAWING

THRIE BEAM GUARDRAIL

REQUIRES SHEET 1 OF 2

English

STANDARD DRWG. NO.

G-1-A-5

SHEET 2 OF 2

PROFESSIONAL ENGINEER * REGISTERED * LAND SURVEYOR 2240 5-16-07 STATE OF IDAHO MILFORD MILLER