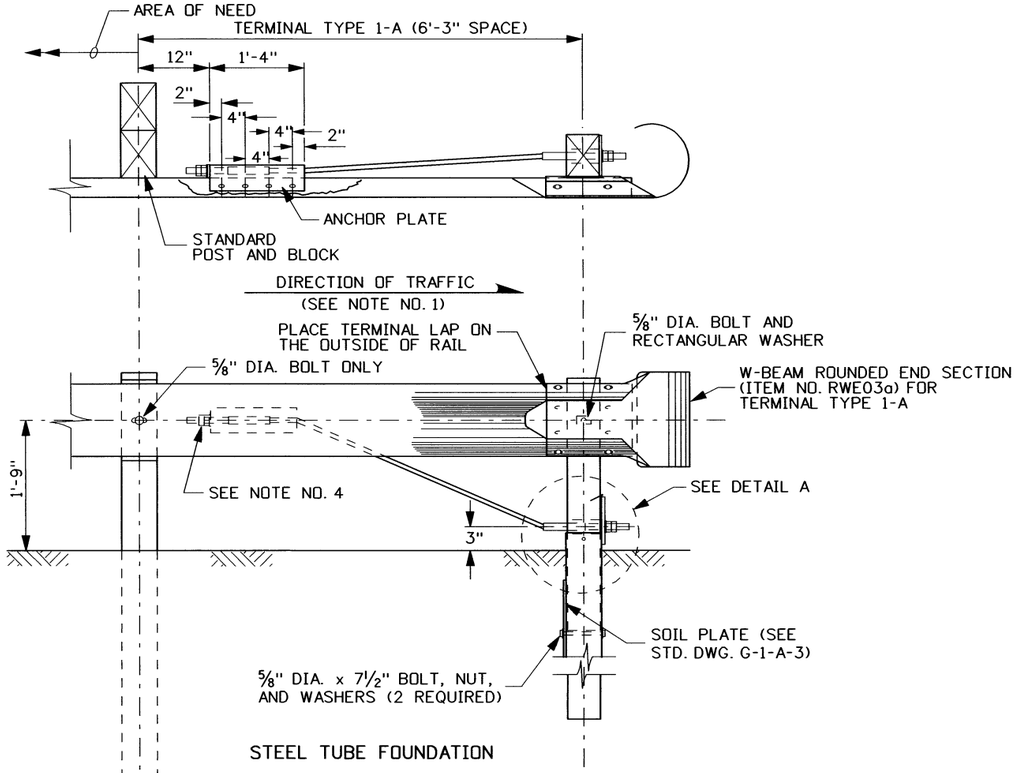

STEEL TUBE FOUNDATION

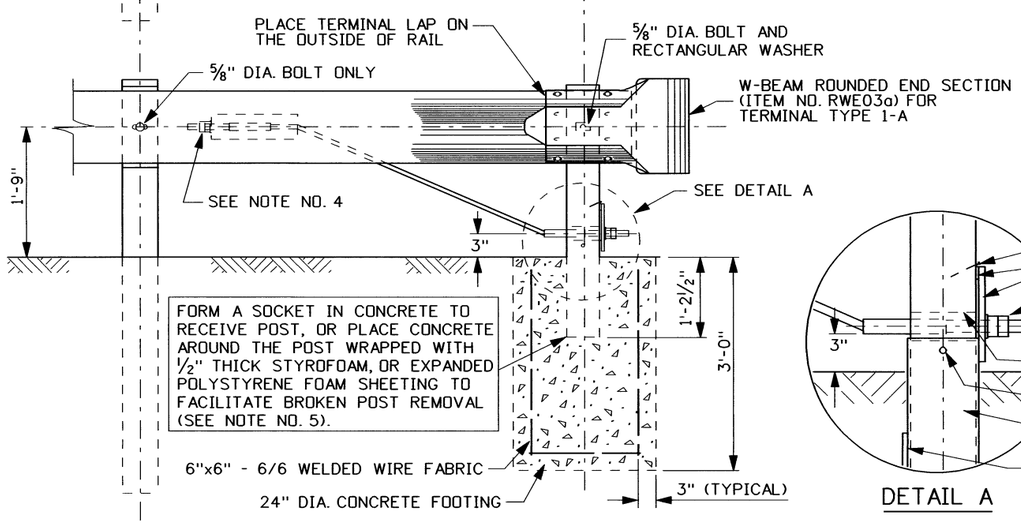

CONCRETE FOUNDATION

TERMINAL TYPE 1-A

WARNING! - SEE NOTE NO. 1

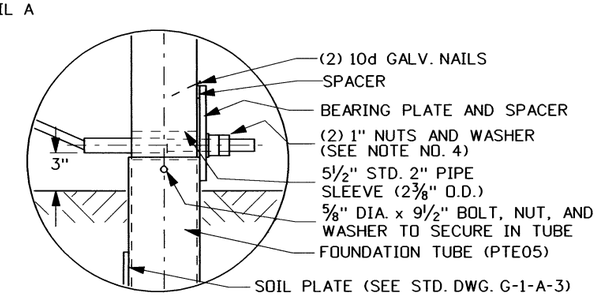

DETAIL A

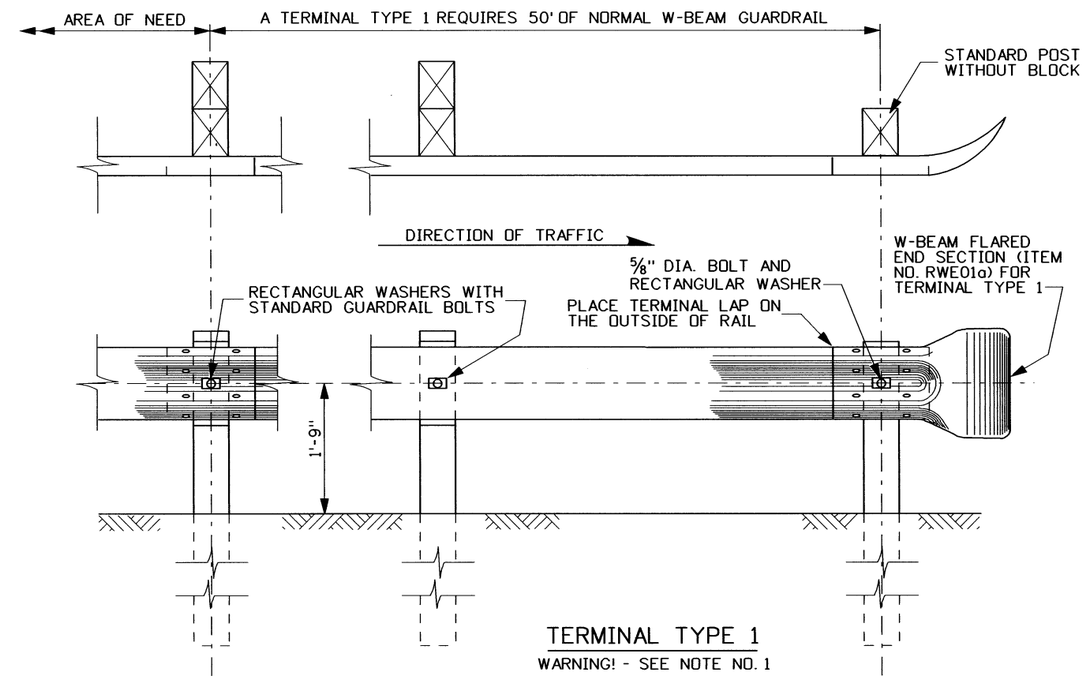

TERMINAL TYPE 1

WARNING! - SEE NOTE NO. 1

NOTES

1. THE TYPE 1 AND TYPE 1-A TERMINALS DO NOT MEET ANY NCHRP 350 REQUIREMENTS. THESE TERMINALS MAY ONLY BE USED WHERE NOT EXPOSED TO APPROACHING TRAFFIC.
2. THIS DRAWING REQUIRES STANDARD DRAWINGS G-1-A-1 THROUGH G-1-A-4 FOR W-BEAM GUARDRAIL INSTALLATION REQUIREMENTS AND HARDWARE AND ACCESSORY SPECIFICATIONS.
3. A STANDARD WOOD 6"x8" x 3'-6 1/2" BCT POST IS ACCEPTABLE WHEN THE CONCRETE FOUNDATION IS USED.
4. THE OUTSIDE NUT ON EACH END OF THE ANCHOR CABLE SHALL BE TORQUED TO A MINIMUM OF 100 FT. - LBS. AGAINST THE INSIDE NUT.
5. FILL THE VOID BETWEEN THE INSIDE OF THE FOUNDATION TUBE AND POST WITH EXPANDED RIGID POLYSTYRENE PLASTIC FOAM.
6. NOT TO SCALE.

REVISIONS

NO.	DATE	BY	NO.	DATE	BY	NO.	DATE	BY
1	1-00	MSM						
2	7-03	MSM						
3	12-04	MSM						
4	5-06	MSM						

SCALES SHOWN ARE FOR 11" X 17" PRINTS ONLY

CADD FILE NAME glb_0506.std

DRWG. ORIG. DATE: JUNE, 1996

IDAHO TRANSPORTATION DEPARTMENT

BOISE IDAHO

ASSISTANT CHIEF ENGINEER (DEVELOPMENT)

CHIEF ENGINEER

STANDARD DRAWING

GUARDRAIL TERMINALS TYPE 1 & 1-A

REQUIRES STD. DWGS. G-1-A-1 THRU G-1-A-4

English

STANDARD DRWG. NO.

G-1-B

SHEET 1 OF 1

PROFESSIONAL ENGINEER * LAND SURVEYOR REGISTERED 2240 5/2/06 STATE OF IDAHO MILFORD MILLER