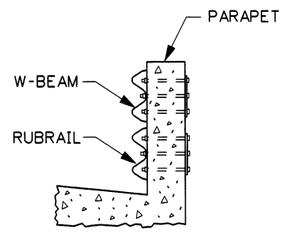

SECTION A-A

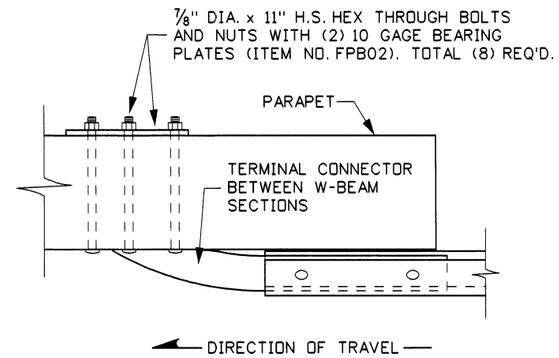

DETAIL A

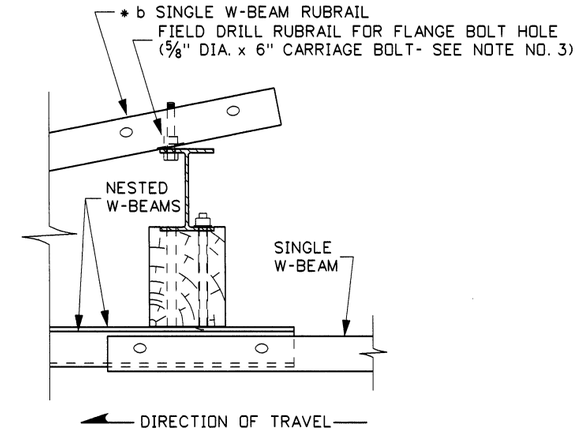

DETAIL B

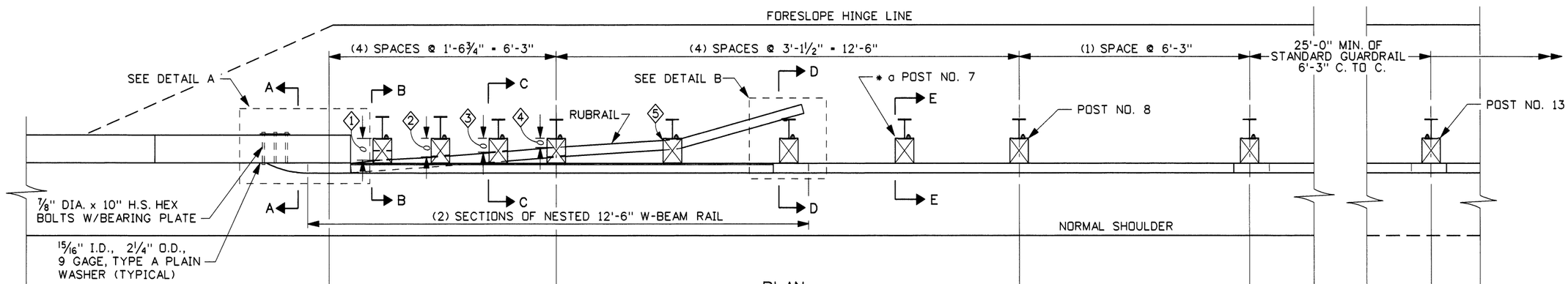

PLAN

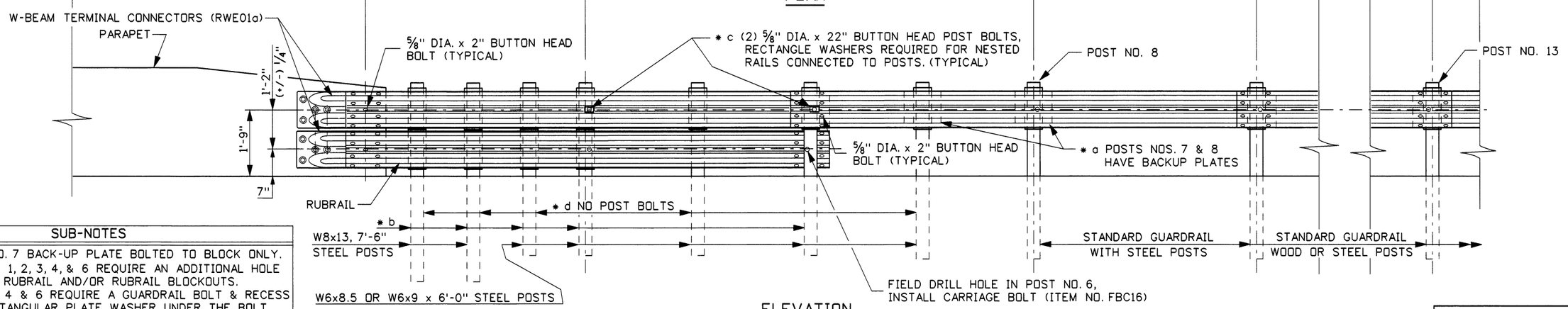

ELEVATION

SUB-NOTES
* a AT POST NO. 7 BACK-UP PLATE BOLTED TO BLOCK ONLY.
* b POSTS NOS. 1, 2, 3, 4, & 6 REQUIRE AN ADDITIONAL HOLE TO ATTACH RUBRAIL AND/OR RUBRAIL BLOCKOUTS.
* c POSTS NOS. 4 & 6 REQUIRE A GUARDRAIL BOLT & RECESS NUT W/RECTANGULAR PLATE WASHER UNDER THE BOLT HEAD AND A STEEL WASHER UNDER THE NUT.
* d DO NOT BOLT W-BEAM OR RUBRAIL W-BEAM TO POSTS NOS. 1, 2, 3, 5, & 7.

REVISIONS

NO.	DATE	BY	NO.	DATE	BY	NO.	DATE	BY
1	7-92	MSM	6	5-06	MSM			
2	8-00	MSM						
3	1-01	MSM						
4	6-01	MSM						
5	10-04	MSM						

SCALES SHOWN ARE FOR 11" X 17" PRINTS ONLY

CADD FILE NAME glk_0506.std

DRWG. ORIG. DATE: MARCH, 1992

IDAHO TRANSPORTATION DEPARTMENT

BOISE IDAHO

ASSISTANT CHIEF ENGINEER (DEVELOPMENT)

CHIEF ENGINEER

STANDARD DRAWING

GUARDRAIL TERMINAL TYPE 9

REQUIRES SHEET 2 OF 2 & STD. DWGS. G-1-A-1 THRU G-1-A-4

English

STANDARD DRWG. NO.

G-1-K

SHEET 1 OF 2

PROFESSIONAL ENGINEER * LAND SURVEYOR * REGISTERED 2240 5/3/06 STATE OF IDAHO MILFORD MILLER

POST NOS. 1-2

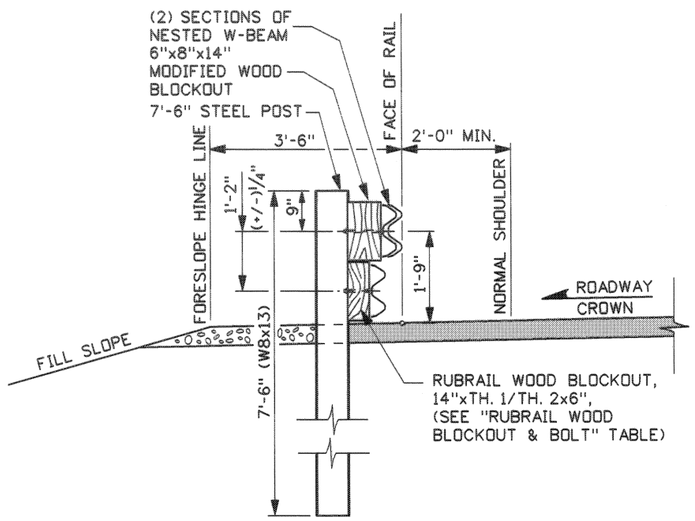

SECTION B-B

POST NOS. 3-5

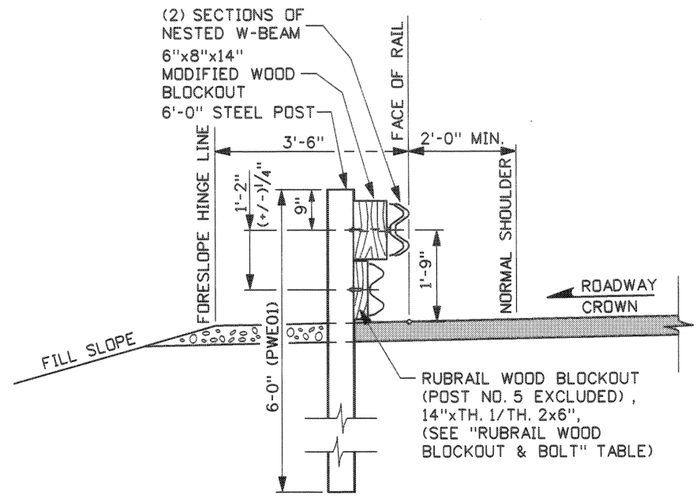

SECTION C-C

POST NO. 6

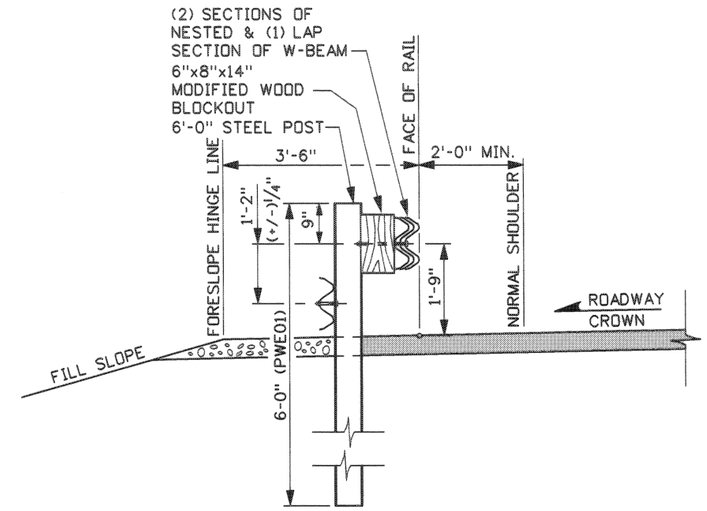

SECTION D-D

POST NO. 7

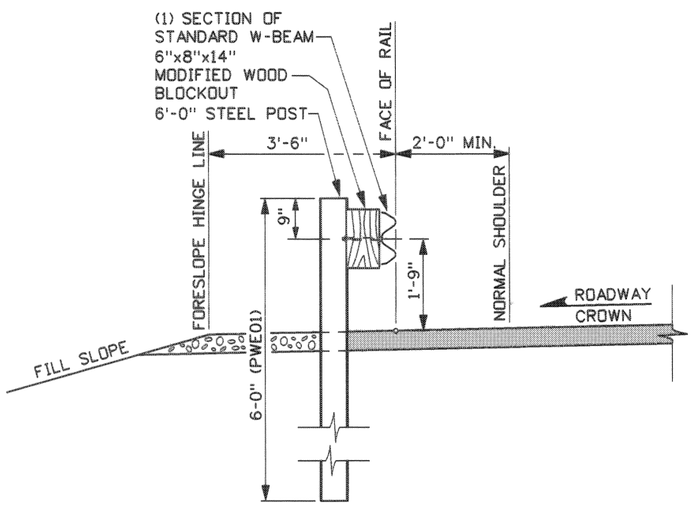

SECTION E-E

TABLE OF MAXIMUM TAPERS	
DESIGN SPEED (mph)	TAPER
75	16:1
70	15:1
65	14:1
60	13:1
55	12:1
50	11:1
45	10:1
40	9:1
≤35	8:1

RUBRAIL WOOD BLOCKOUT & BOLTS			
POST NO.	* THICKNESS 1	* THICKNESS 2	BOLT SIZE
1	7 1/4"	6 3/4"	5/8" DIA. x 10"
2	6"	5 1/2"	5/8" DIA. x 8"
3	4 3/4"	4 1/4"	5/8" DIA. x 8"
4	3 1/2"	3"	5/8" DIA. x 6"
5	NO BLOCKOUT		5/8" DIA. x 4"
6	RUBRAIL END POST		5/8" DIA. x 4"

* SEE RUBRAIL BLOCKOUT DETAIL

POSTS NOS. 1 - 4

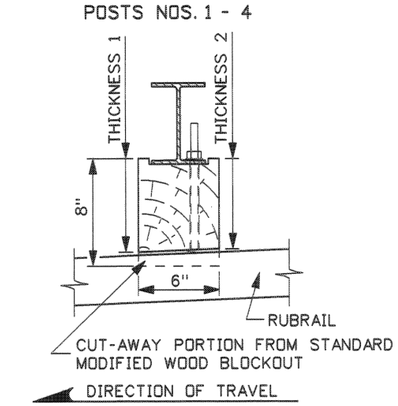

RUBRAIL BLOCKOUT DETAIL

NOTES

1. THIS TERMINAL IS TO BE USED AS A RETROFIT FOR THE OLD STYLE TYPE 3 TERMINALS. FOR NEW INSTALLATION USE TYPE 3 TERMINAL AS SHOWN ON STD. DWG. G-1-E.
2. SEE STANDARD DRAWINGS G-1-A-1 THROUGH G-1-A-4 FOR INSTALLATION DETAILS, POST AND BLOCKOUT DETAILS FOR W-BEAM GUARDRAIL AND GUARDRAIL HARDWARE.
3. ALL BOLTS FOR RUBRAIL BEAM AND WOOD BLOCKOUTS WILL HAVE A MINIMUM OF 5" OF COURSE THREADING.
4. W-BEAM MEASUREMENTS ARE MADE ALONG THE FACE OF RAIL FROM THE CENTER OF RAIL TO THE ROADWAY SURFACE. RUBRAIL MEASUREMENTS ARE FROM THE CENTER OF RAIL TO THE CENTER OF RUBRAIL.
5. GUARDRAIL FOR END SHOE SHALL BE LAPPED IN THE DIRECTION OF NEAREST TRAFFIC LANE TO PREVENT SNAGGING, SEE DETAILS A & B.
6. THE RUBRAIL MAY BE SHOP BENT TO FACILITATE INSTALLATION.
7. USE THE "TABLE OF MAXIMUM TAPERS" WHEN TAPERING GUARDRAIL TO MATCH BRIDGE PARAPET.
8. NOT TO SCALE.

REVISIONS								
NO.	DATE	BY	NO.	DATE	BY	NO.	DATE	BY
1	7-92	MSM	6	5-06	MSM			
2	8-00	MSM						
3	1-01	MSM						
4	6-01	MSM						
5	10-04	MSM						

SCALES SHOWN ARE FOR 11" X 17" PRINTS ONLY

CADD FILE NAME g1k_0506.std

DRWG. ORIG. DATE: MARCH, 1992

IDAHO TRANSPORTATION DEPARTMENT

BOISE IDAHO

ASSISTANT CHIEF ENGINEER (DEVELOPMENT)

CHIEF ENGINEER

STANDARD DRAWING

GUARDRAIL TERMINAL TYPE 9

REQUIRES SHEET 1 OF 2 & STD. DWGS. G-1-A-1 THRU G-1-A-4

English

STANDARD DRWG. NO.

G-1-K

SHEET 2 OF 2

PROFESSIONAL ENGINEER * LAND SURVEYOR REGISTERED 2240 5/3/06 STATE OF IDAHO MILFORD MILLER