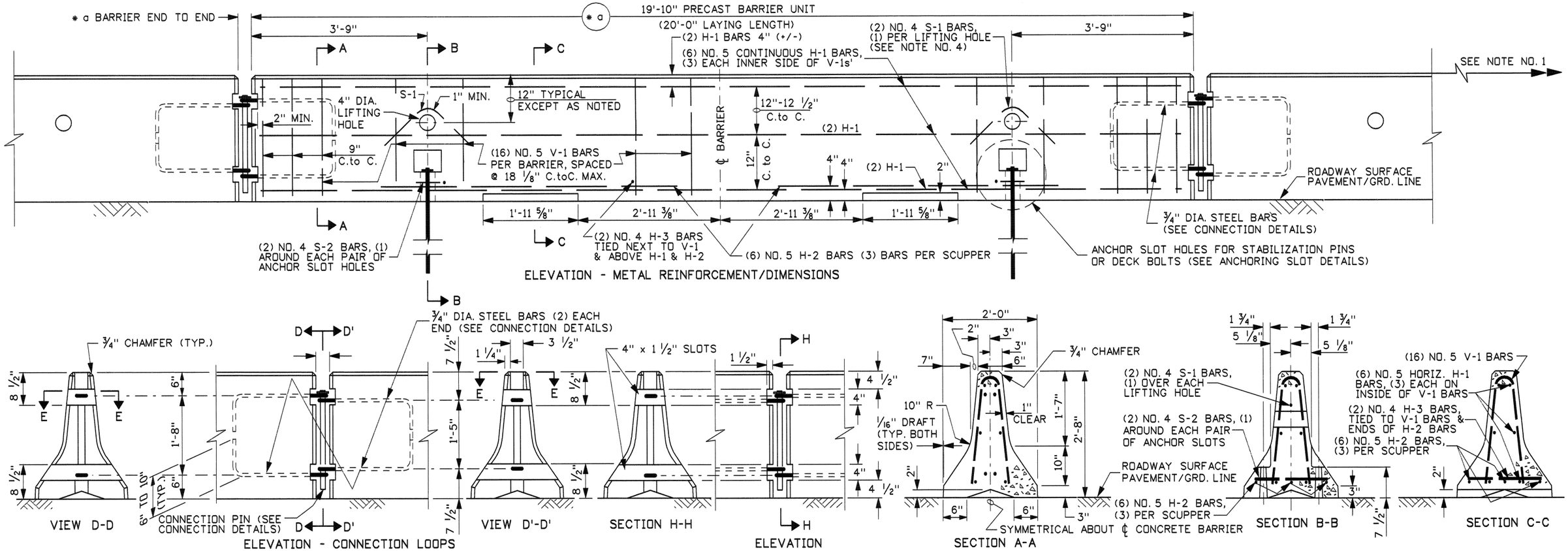

TYPICAL BARRIER DETAILS

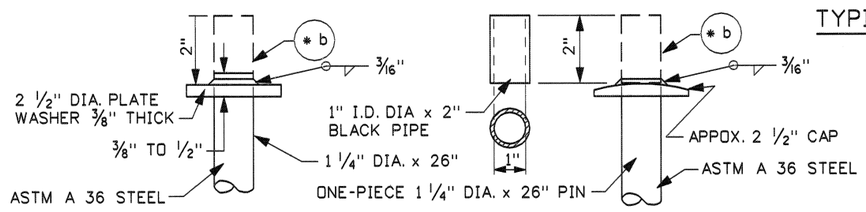

SUB-NOTES
* a PINNED BARRIER END TO END SPACE CAN VARY, (+/-) 1/4", TYPICAL LAYOUT LENGTH IS 20' ℄ PIN TO ℄ PIN).
* b WITH DELINEATOR ATTACHED: REQUIRES CONNECTING PIN 1 1/4" DIA. x 28" LONG, OR MODIFICATION OF THE ONE-PIECE PIN, REFER TO STD. DWG. G-3-A.

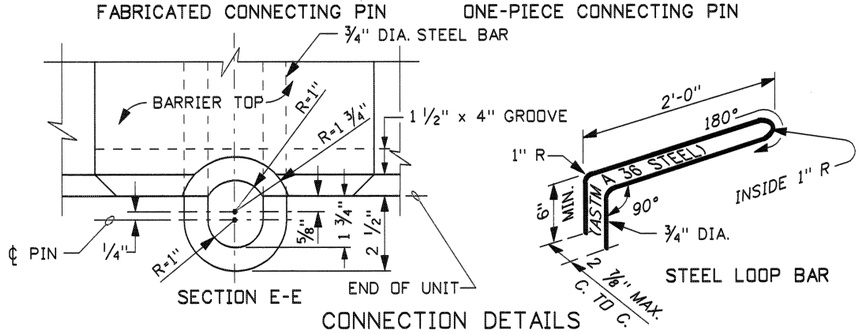

CONNECTION DETAILS

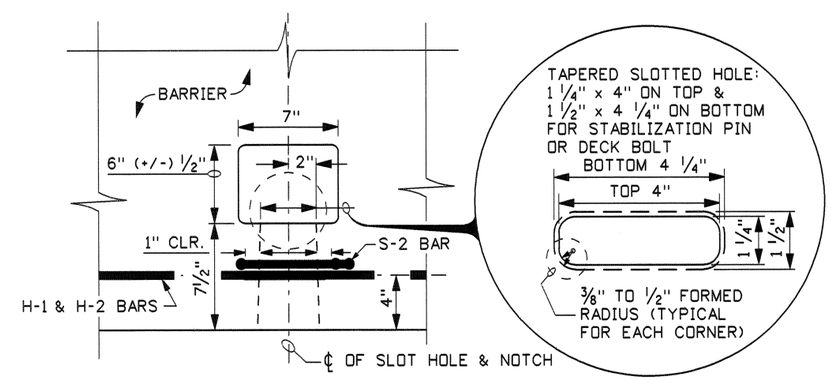

ANCHORING SLOT DETAILS

REVISIONS								
NO.	DATE	BY	NO.	DATE	BY	NO.	DATE	BY
1	8-00	MSM	6	6-04	MSM			
2	12-01	MSM	7	10-04	MSM			
3	7-02	MSM						
4	7-03	MSM						
5	9-03	MSM						

SCALES SHOWN ARE FOR 11" X 17" PRINTS ONLY

CADD FILE NAME g2a11004.std

DRWG. ORIG. DATE: NOVEMBER, 1999

IDAHO TRANSPORTATION DEPARTMENT

BOISE IDAHO

ASSISTANT CHIEF ENGINEER (DEVELOPMENT)

CHIEF ENGINEER

STANDARD DRAWING

20' CONCRETE BARRIER

REQUIRES SHEET 2 OF 2

English

STANDARD DRWG. NO.

G-2-A-1

SHEET 1 OF 2

PROFESSIONAL ENGINEER REGISTERED 2240 10/13/04 STATE OF IDAHO MILFORD L. MILLER

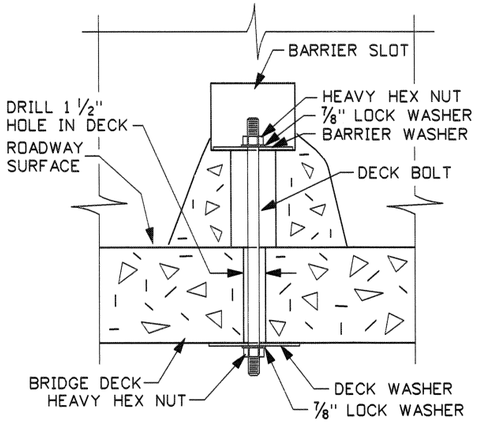

DECK BOLT ANCHORING

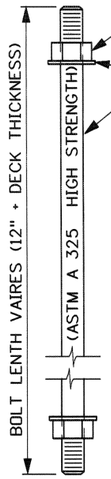

DECK BOLT

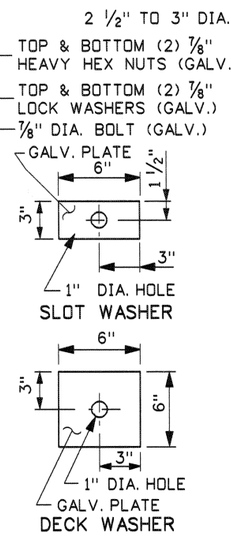

DECK WASHER

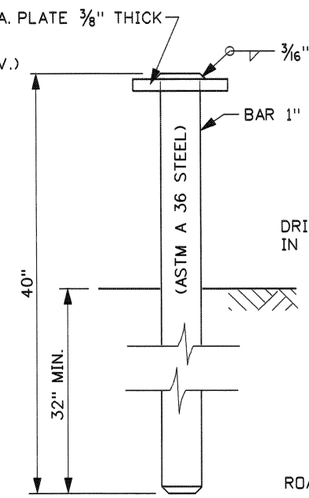

STABILIZATION PIN

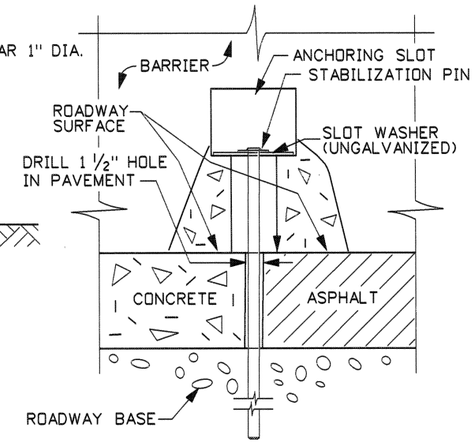

STABILIZATION PIN ANCHORING

ANCHORING ASSEMBLY CON'T.

(SEE NOTE NOS. 1, 3, 5, & 7)

METAL REINFORCEMENT TABLE (SEE SUB-NOTES * c & * d)				
MARK	LOCATION	BAR SIZE	(NO.BARS)	SKETCH
H-1	HORIZONTAL IN BARRIER TIED INSIDE V-1 BARS	NO. 5	(6)	19'-3"
H-2	CENTERED ABOVE SCUPPERS LONG. & TRANSVERSELY	NO. 5	(6)	6'-6"
H-3	TIED ABOVE H-1 BARS TO SUPPORT H-2, TIED TO V-1	NO. 4	(2)	1'-6"
S-1	HORIZ. IN TOP OF WING WALL & IN FLOOR BACK WALL	NO. 4	(2)	2'-5" LIFTING HOLE 90° 3 3/8" R
S-2	HORIZ. AROUND SLOTS BETWEEN V-I'S @ SCUPPERS	NO. 4	(2)	5'-3" BAR W/(4) 1 1/2" R BENDS & MIN. 1'-0" OVERLAP; 1 1/2" R; SLOTS; 1' MIN. OVRLP.; 1" MIN. CLEAR TO BAR; 1'-6 1/2"; * d O.to O.; * d O.to O. 8"
V-1	VERTICAL IN BARRIER(3) EACH END & (2) AT EACH SCUPPER	NO. 5	(16)	TOTAL LENGTH 4'-9"; 2" R; 12°; * d O.to O.; 4 7/8"; 2'-1 3/8"; (+/-) 10"

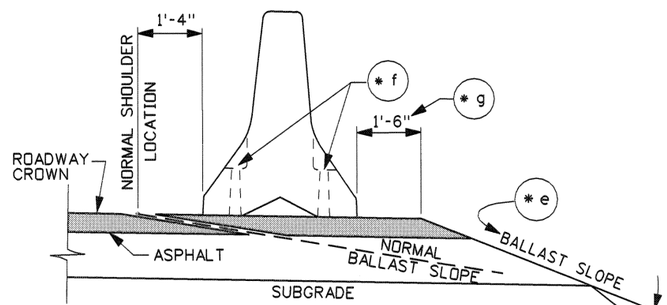

SUB-NOTES CON'T.
* e BALLAST SLOPE VARIABLE BU T NOT STEEPER 2:1.
* f NO STABILIZATION PINS (SEE NOTE NOS. 1 & 3)
* g WHEN BARRIER IS ANCHORED THE SHOULDER OFFSET MAY BE 0'-0".

STANDARD INSTALLATION

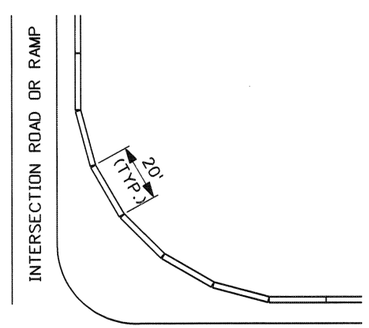

BARRIER ARRANGED ON A CURVE
MAY BE USED: 1. WHERE POSTED SPEED IS 35 mph OR LESS (SEE NOTE NO. 8). 2. WHERE BARRIER IS OUTSIDE THE CLEAR ZONE.
NOTE: NORMALLY PINS CAN BE USED UNTIL CURVING EXCEEDS 10° BETWEEN UNITS.

CURVED LAYOUT

(SEE NOTE NO. 9)

SUB-NOTES
* c ALL METAL REINFORCEMENT BENDS ARE TO BE ACCORDING TO THE LATEST A.C.I. STANDARD PRACTICE AND AASHTO SPECIFICATIONS.
* d DIMENSIONS SHOWN IN THE "METAL REINFORCEMENT TABLE" ARE OUT-TO-OUT (O.to O.) OF BEND POINTS AND/OR END OF BARS UNLESS OTHERWISE NOTED.

TABLE OF MAXIMUM TAPERS FOR CONCRETE BARRIER	
DESIGN SPEED (mph)	TAPER
70	20:1
60	17:1
50	14:1
45	13:1
40	11:1
35	10:1

GENERAL NOTES

1. ANCHORING THIS BARRIER IS NOT REQUIRED TO MEET NCHRP 350, TL-3 REQUIREMENTS: HOWEVER, THE BARRIER MUST BE PROPERLY TERMINATED (THIS IS A "STANDARD INSTALLATION"). ANCHORING IS ALLOWED IN SITUATIONS WHERE LATERAL MOVEMENT MUST BE RESTRICTED (NOTE: ANCHORING ASSEMBLIES INCLUDE DECK BOLTS AND STABILIZATION PINS).
2. WHEN CONNECTING 10' TO 20' CONCRETE BARRIER THE EXPOSED CONNECTINGLOOPS MAY NEED TO BE BENT (MECHANICALLY, NOT WITH HEAT) TO FIT.
3. WHEN INSTALLING UNANCHORED 20' CONCRETE BARRIER ALLOW FOR 3' OF LATERAL MOVEMENT BEHIND THE BARRIER.
4. A 4" WHITE PVC SLEEVE MAY BE USED TO FORM THE LIFTING HOLE AND IF USED THE SLEEVE IS TO BE LEFT IN PLACE.
5. ANCHORED BARRIER UNITS SHALL HAVE FOUR ANCHOR ASSEMBLIES.
6. THE UNIT SHALL BE PRECAST USING CONCRETE CLASS 40B. THE MINIMUM CONCRETE COVER OVER REINFORCEMENT STEEL SHALL BE 2" UNLESS OTHERWISE NOTED.
7. WHEN ANCHORING A BARRIER SYSTEM USE AND DO THE FOLLOWING:
   a. DO NOT DRILL ANCHOR HOLES INTO PRESTRESSED CONCRETE DECK PANELS.
   b. EXPANSION ANCHORS WILL NOT BE PERMITTED FOR USE ON BRIDGE DECKS.
   c. USE ASTM A 325 HIGH STRENGTH GALVANIZED STEEL FOR DECK BOLTS.
   d. A ONE PIECE STABILIZATION PIN WITH A 3" ROUNDED TOP THAT MEETS ASTM A 36 REQUIREMENTS IS ALLOWED.
   e. BRIDGE DECK ANCHOR HOLES SHALL BE DRILLED/CORED SMOOTH AND ROUND.
   f. FOR BARRIER UNITS THAT EXTEND ACROSS BRIDGE EXPANSION JOINTS, DO NOT ANCHOR THE BARRIER (ANCHORED INSTALLATIONS REQUIRE SECURING ALL FOUR ANCHOR SLOTS).
   g. TIGHTEN DECK BOLTS DOWN WELL, BOLT LENGTH SHOULD ALLOW AT LEAST ONE COURSE OF THREADS SHOW OUTSIDE OF THE NUT WHEN TIGHTENED.
   h. DO NOT PROTRUDE THE TOP OF THE DECK BOLT/STABILIZATION PIN HEAD/END BEYOND WHERE THE SLOT EDGE MEETS THE EXTERIOR BARRIER SURFACE.
8. FOR SPEEDS GREATER THAN OR EQUAL TO 35 mph BARRIERS MUST BE PINNED TOGETHER AND CAN NOT EXCEED THE TABLE OF MAXIMUM TAPERS.
9. THE PIN CONNECTED 20' BARRIER DESIGN ALLOWS FOR:
   a. APPROXIMATELY TEN TO ELEVEN PINNED BARRIER UNITS TO COMPLETE A 90° TURN.
   b. CONNECTION JOINTS CAN BEND UP TO 10° BEFORE MEETING RESISTANCE WITH THE ADJACENT BARRIER.
10. NOT TO SCALE.

REVISIONS								
NO.	DATE	BY	NO.	DATE	BY	NO.	DATE	BY
1	8-00	MSM	6	6-04	MSM			
2	12-01	MSM	7	10-04	MSM			
3	7-02	MSM						
4	7-03	MSM						
5	9-03	MSM						

SCALES SHOWN ARE FOR 11" X 17" PRINTS ONLY

CADD FILE NAME g2a11004.std

DRWG. ORIG. DATE: NOVEMBER, 1999

IDAHO TRANSPORTATION DEPARTMENT

BOISE IDAHO

Steven C. Hutchinson
ASSISTANT CHIEF ENGINEER (DEVELOPMENT)

CHIEF ENGINEER

STANDARD DRAWING

20' CONCRETE BARRIER

REQUIRES SHEET 1 OF 2

English

STANDARD DRWG. NO.

G-2-A-1

SHEET 2 OF 2

PROFESSIONAL ENGINEER REGISTERED 2240 10/13/04 STATE OF IDAHO MILFORD L. MILLER