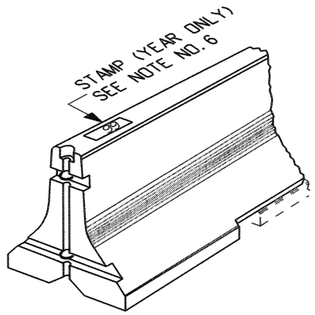

ISOMETRIC VIEW

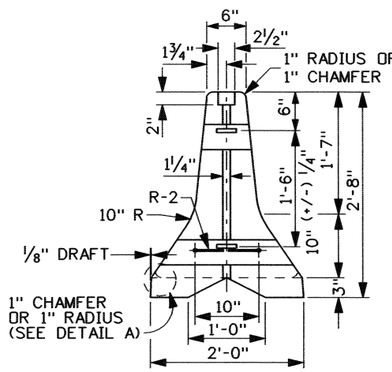

END VIEW

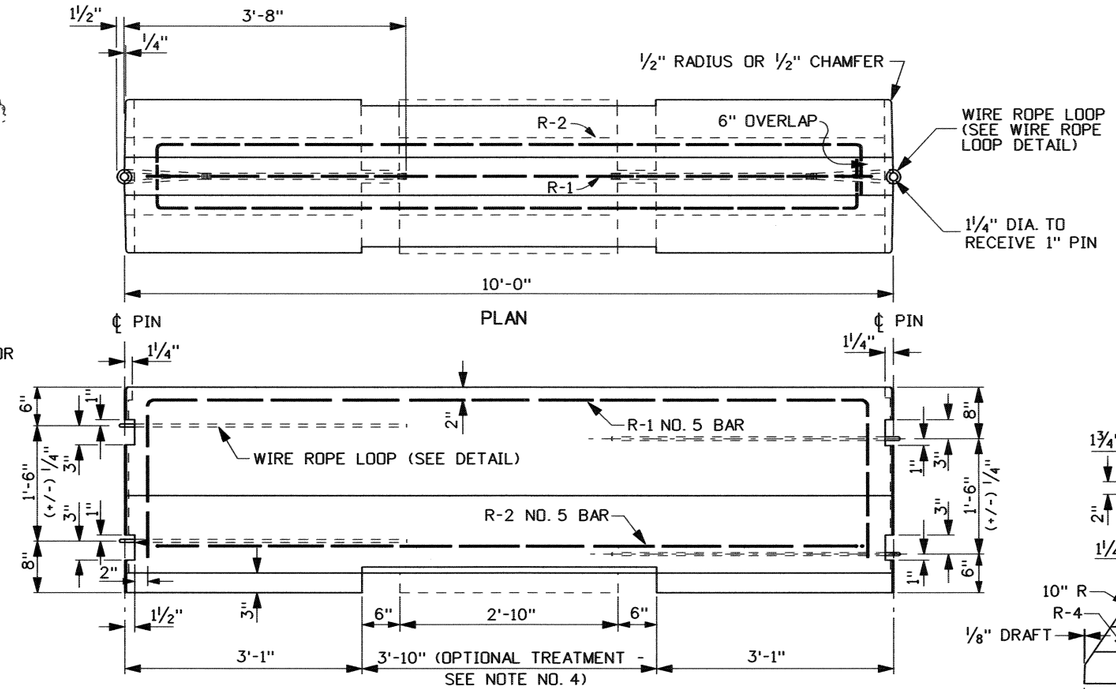

ELEVATION

CONCRETE BARRIER DETAILS

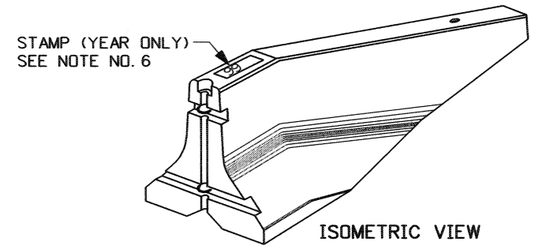

ISOMETRIC VIEW

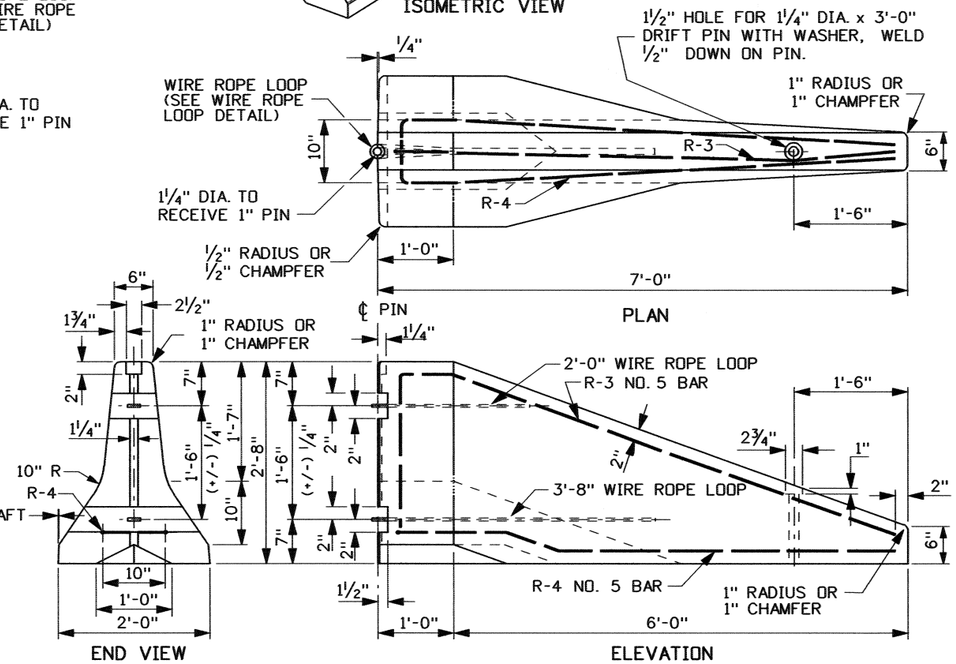

END VIEW

ELEVATION

TYPE A TERMINAL DETAILS

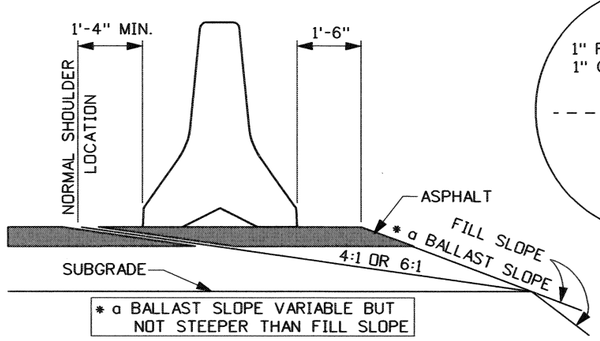

LOCATION OF BARRIER AT SHOULDER

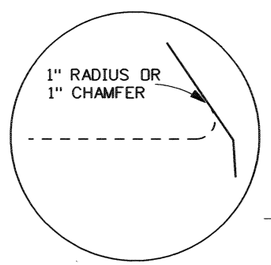

DETAIL A

TABLE OF MAXIMUM TAPERS FOR CONCRETE BARRIER	
DESIGN SPEED (MPH)	TAPER
70	20:1
60	17:1
50	14:1
40	11:1

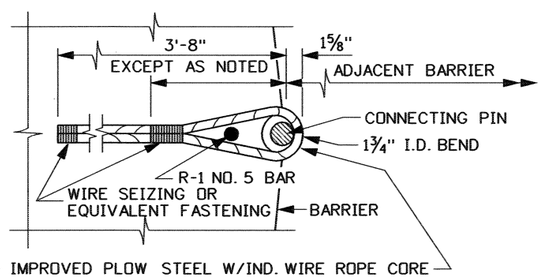

WIRE ROPE DETAIL

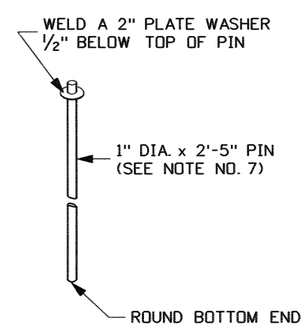

CONNECTING PIN

NOTES

1. THE 10' CONCRETE BARRIER AND TYPE A TERMINAL ARE LIMITED USE ITEMS AND DO NOT MEET NCHRP 350 TL-3 REQUIREMENTS.
2. THE UNIT SHALL BE PRECAST USING CONCRETE CLASS 30. THE MINIMUM CONCRETE COVER OVER REINFORCEMENT STEEL SHALL BE 2".
3. TERMINAL SECTION TYPE A IS A RESTRICTED USE ITEM. WHEN THE BARRIER IS FLARED USE THE "TABLE OF MAXIMUM TAPERS FOR CONCRETE BARRIER".
4. WHEN PREFERRED, THE OPEN BOTTOM PORTION OF THE BARRIER NOTED IN THE ELEVATION VIEW MAY BE FILLED EXCEPT FOR TWO 6" SLOTS WHICH ARE TO BE RETAINED.
5. ALL SECTIONS INCLUDING TERMINALS SHALL BE CLEARLY AND PERMANENTLY STAMPED TO IDENTIFY THE MANUFACTURING COMPANY'S NAME AND THE DATE (YEAR) OF MANUFACTURE. WHEN THE COMPANY HAS MORE THAN ONE PLANT THE STAMP SHALL INDICATE THE SPECIFIC LOCATION OF MANUFACTURE.
6. THE YEAR OF MANUFACTURER SHALL BE SET IN THE TOP OF EACH SECTION. THE STAMP SHALL BE 2" BLOCK LETTERING, ¼" WIDE AND ¼" DEEP.
7. THE STEEL CONNECTOR PIN SHALL CONFORM TO ASTM A 36 REQUIREMENTS.
8. NOT TO SCALE.

REVISIONS								
NO.	DATE	BY	NO.	DATE	BY	NO.	DATE	BY
1	1-86	GB	6	12-92	MSM			
2	8-86	GB	7	9-93	MSM			
3	6-87	GB	8	2-96	MSM			
4	4-89	GB	9	1-00	MSM			
5	1-91	GB	10	12-04	MSM			

SCALES SHOWN ARE FOR 11" X 17" PRINTS ONLY

CADD FILE NAME g2a_1204.std

DRWG. ORIG. DATE: NOVEMBER, 1974

IDAHO TRANSPORTATION DEPARTMENT

BOISE IDAHO

ASSISTANT CHIEF ENGINEER (DEVELOPMENT)

CHIEF ENGINEER

STANDARD DRAWING

CONCRETE BARRIER & TERMINAL TYPE A

English

STANDARD DRWG. NO.

G-2-A

SHEET 1 OF 1

PROFESSIONAL ENGINEER REGISTERED 2240 12/30/04 STATE OF IDAHO MILFORD L. MILLER