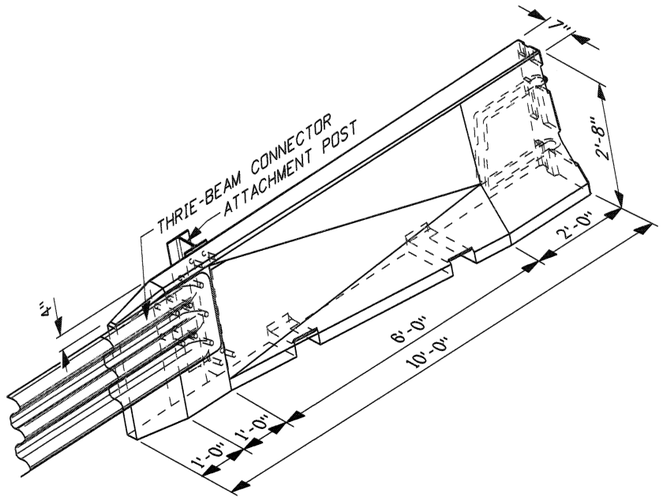

PERSPECTIVE - SHOWING FRONT OF CONNECTOR

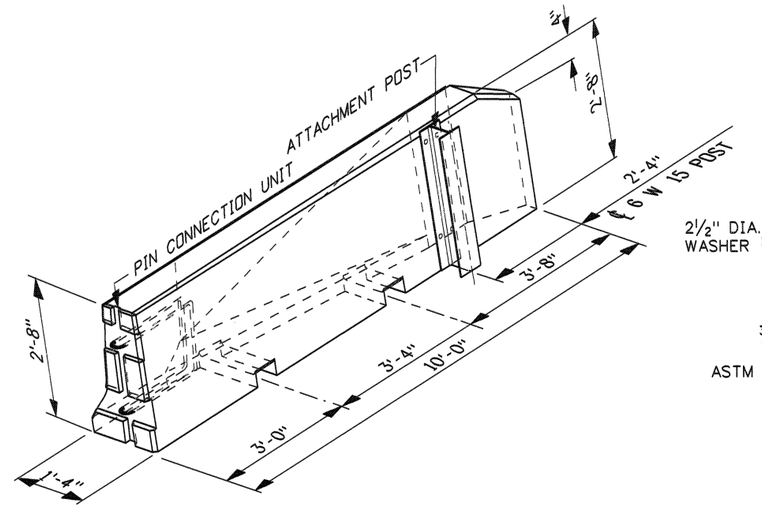

PERSPECTIVE - SHOWING BACK OF CONNECTOR

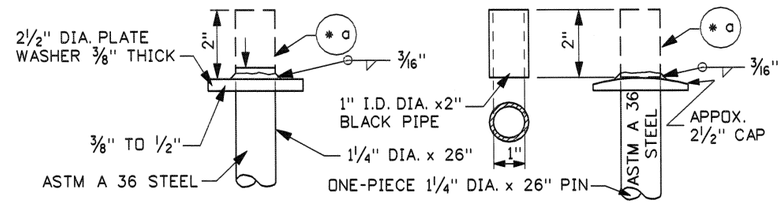

FABRICATED CONNECTING PIN

ONE-PIECE CONNECTING PIN

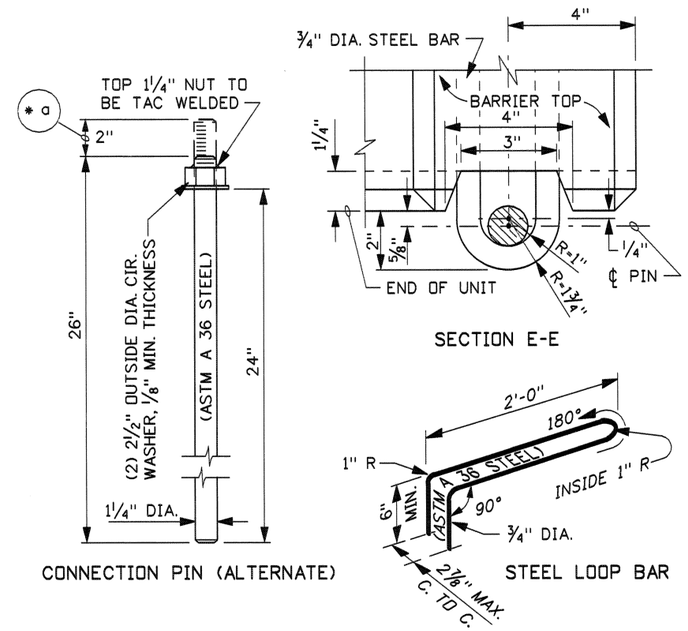

CONNECTION PIN (ALTERNATE)

SECTION E-E

STEEL LOOP BAR

CONNECTION DETAILS

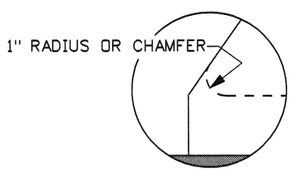

DETAIL A

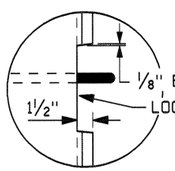

DETAIL B

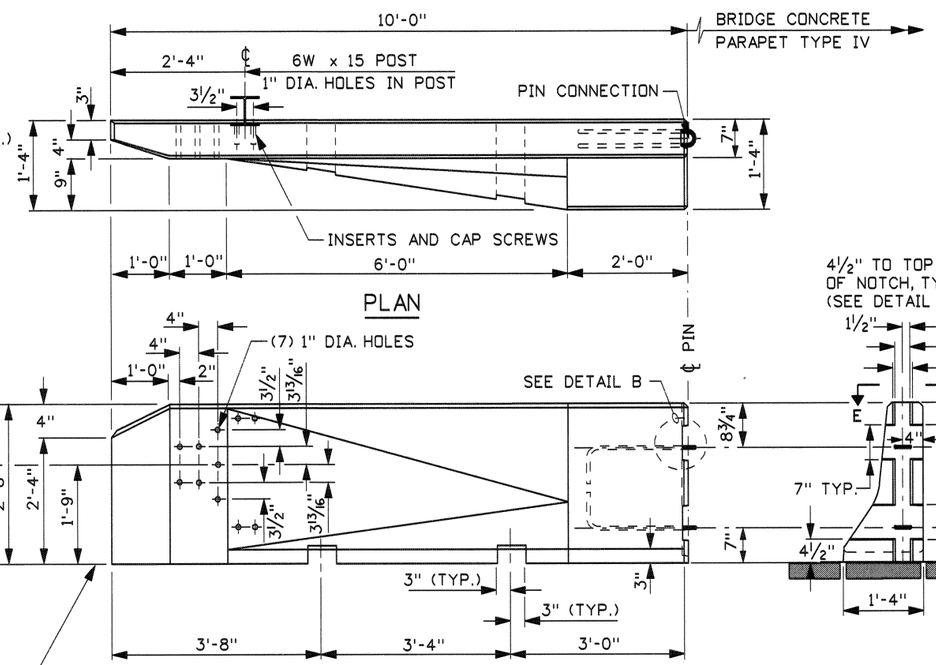

PLAN

ELEVATION

APPROACHING END VIEW

CONNECTION END VIEW

REVISIONS								
NO.	DATE	BY	NO.	DATE	BY	NO.	DATE	BY
1	7-78		6	1-91	GB	11	12-02	MSM
2	6-80		7	12-92	MSM	12	12-04	MSM
3	1-82		8	4-94	MSM			
4	5-82		9	2-96	MSM			
5	7-88	GB	10	5-99	MSM			

SCALES SHOWN ARE FOR 11" X 17" PRINTS ONLY

CADD FILE NAME g2c_1204.std

DRWG. ORIG. DATE: AUGUST, 1977

IDAHO TRANSPORTATION DEPARTMENT

BOISE IDAHO

Steven C. Hutchinson
ASSISTANT CHIEF ENGINEER (DEVELOPMENT)

CHIEF ENGINEER

STANDARD DRAWING

CONCRETE PARAPET TO THRIE BEAM CONNECTOR

REQUIRES SHEET 2 OF 2 & STD. DWGS. G-1-E & G-2-A-1

English

STANDARD DRWG. NO.

G-2-C

SHEET 1 OF 2

PROFESSIONAL ENGINEER REGISTERED 2240 12/14/04 STATE OF IDAHO MILFORD L. MILLER

(* b & * c) G-2-C METAL REINFORCEMENT TABLE

MARK	LOCATION	BAR SIZE	(NO. BARS)	BAR LENGTH	SKETCH
H-1	HORIZONTAL IN BARRIER TIED TO INSIDE BACK OF V-3a, V-3b, & V-3c BARS	NO. 5	(3)	9'-6"	9'-6"
H-2	HORIZONTAL IN BARRIER TIED TO INSIDE FRONT OF V-3a, V-3b, & V-3c BARS	NO. 5	(3)	8'-9"	8'-9"
V-1	TIED UNDER V-3a THRU V-3b & SET BETWEEN CONN. LOOPS, TOP TIED ON V-2	NO. 5	(1)	13'-0"	2" R; 8'-4"; 2" R; 2'-2"; 2'-0"; 8'-9" (+/-)
V-2	VERT. IN BARRIER END, TIED TO V-1, & TO TOP OF LOOP V-3c	NO. 5	(1)	6'-0"	2" R; 9"; 1'-3"; 160°; 110°; 1'-9"; 2'-4"; 2" R; 1'-9"
V-3a	(VERTICAL IN BARRIER (3) IN TRAILING END, (2) CENTERED OVER TRAILING ANCHORING SLOT	NO. 5	(3)	4'-9"	2" R; 2'-0"; 6°; 4"; 2'-0½"; 6" (+/-) ½"
V-3b	VERTICAL IN BARRIER (2) CENTERED OVER APPROACHING ANCHORING SLOT	NO. 5	(2)	4'-7"	2" R; 2'-0"; 4"
V-3c	VERTICAL IN BARRIER AT APPROACHING END OF BARRIER	NO. 5	(1)	4'-4"	2" R; 1'-10¾"; 4"
L-1	HORIZ. IN BARRIER BASE, FRONT END TIED TO V-2 BOTTOM	NO. 5	(1)	20'-0"	6'-0"; 2" R; 2" R; 7° to 7¼°; 9" MIN. OVERLAP; 4" R; 10¾"; 4'-6"; 1'-5"; 2" R

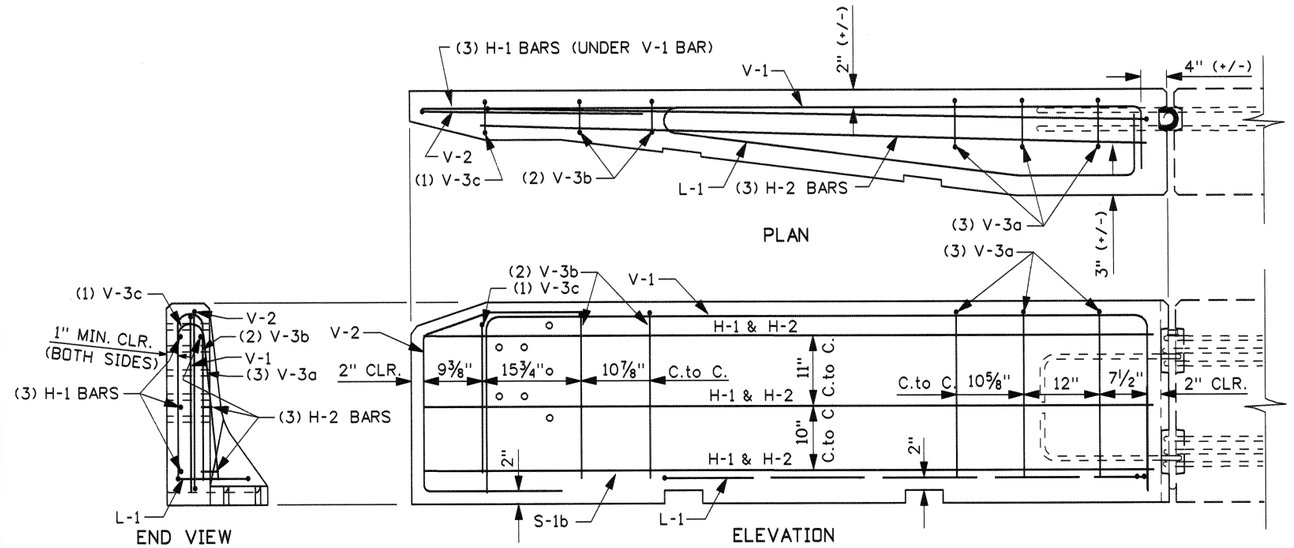

METAL REINFORCEMENT DETAILS

SUB-NOTES
* a WITH DELINEATOR ATTACHED: REQUIRES CONNECTING PIN 1¼" DIA. x 28" LONG, REFER TO STD. DWG. G-3-A.
* b ALL METAL REINFORCEMENT BENDS ARE TO BE ACCORDING TO THE LATEST A.C.I. STANDARD PRACTICE AND AASHTO SPECIFICATIONS.
* c DIMENSIONS SHOWN IN THE "METAL REINFORCEMENT TABLE" ARE OUT-TO-OUT (O.to O.) OF BEND POINTS AND/OR END OF BARS UNLESS OTHERWISE NOTED.

NOTES

1. CONNECTORS SHALL BE FURNISHED AS SHOWN OR OPPOSITE HAND CONFIGURATION AS REQUIRED BY THE SITE.
2. THE CAP SCREWS SHALL BE ASTM A 325 STEEL. INSERTS AND CAP SCREWS SHALL BE GALVANIZED.
3. THE PREFERRED CONSTRUCTION SEQUENCE IS AS FOLLOWS:
   A. FINISH SHOULDER SURFACE INCLUDING PAVING IF REQUIRED.
   B. EXCAVATE HOLE FOR POST ENCASEMENT.
   C. SET CONNECTOR.
   D. BOLT ON 6W x 15 ATTACHMENT POST.
   E. PLACE CONCRETE ENCASEMENT AND FINISH EXPOSED SURFACE.
4. THE UNIT SHALL BE PRECAST USING CONCRETE CLASS 40B. THE MINIMUM CONCRETE COVER OVER REINFORCEMENT STEEL SHALL BE 2" UNLESS OTHERWISE NOTED.
5. THE LATERAL MOVEMENT OF THIS BARRIER TRANSITION SECTION IS RESTRICTED AND SHALL BE ANCHORED WITH A STEEL POST AND CONNECTED TO THE BRIDGE PARAPET
6. WHEN THE ATTACHING THE CONNECTOR TO 10' OR 20' CONCRETE BARRIER OR EXISTING BRIDGE PARAPET THE EXPOSED CONNECTING LOOPS MAY NEED TO BE BENT (MECHANICALLY NOT WITH HEAT) TO FIT.
7. ALL THRIE-BEAM METAL GUARDRAIL, ATTACHMENT POST, AND ASSESSORIES SHALL CONFORM TO THE SPECIFICATIONS CONTAINED WITHIN THE "GUIDE TO STANDARDIZED HIGHWAY BARRIER HARDWARE".
8. THE STEEL CONNECTOR PIN SHALL CONFORM TO ASTM A 36 REQUIREMENTS.
9. NOT TO SCALE.

PROFESSIONAL ENGINEER REGISTERED 2240 12/14/04 STATE OF IDAHO MILFORD L. MILLER

REVISIONS								
NO.	DATE	BY	NO.	DATE	BY	NO.	DATE	BY
1	7-78		6	1-91	GB	11	12-02	MSM
2	6-80		7	12-92	MSM	12	12-04	MSM
3	1-82		8	4-94	MSM			
4	5-82		9	2-96	MSM			
5	7-88	GB	10	5-99	MSM			

SCALES SHOWN ARE FOR 11" X 17" PRINTS ONLY

CADD FILE NAME g2c_1204.std

DRWG. ORIG. DATE: AUGUST, 1977

IDAHO TRANSPORTATION DEPARTMENT

BOISE IDAHO

ASSISTANT CHIEF ENGINEER (DEVELOPMENT)

CHIEF ENGINEER

STANDARD DRAWING

CONCRETE PARAPET TO THRIE BEAM CONNECTOR

REQUIRES SHEET 1 OF 2 & STD. DWGS. G-1-E & G-2-A-1

English

STANDARD DRWG. NO.

G-2-C

SHEET 2 OF 2