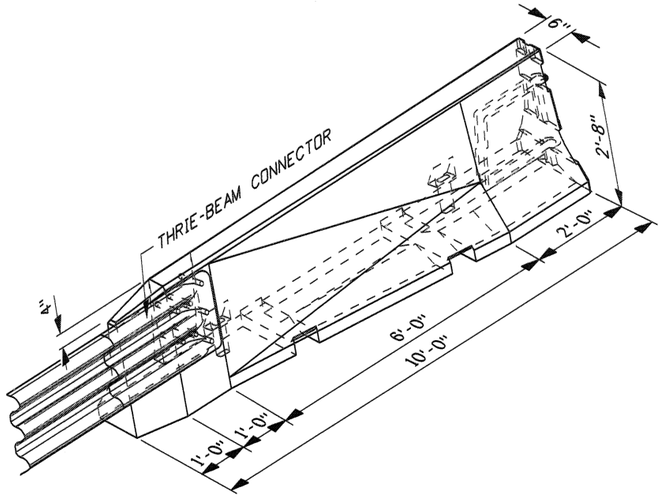

PERSPECTIVE - SHOWING FRONT OF CONNECTOR

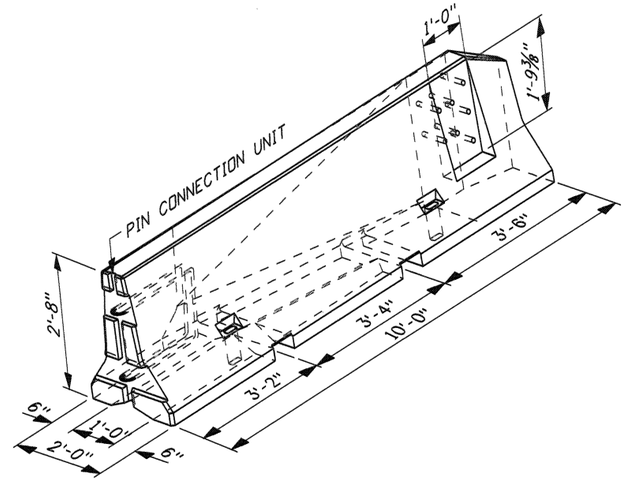

PERSPECTIVE - SHOWING BACK OF CONNECTOR

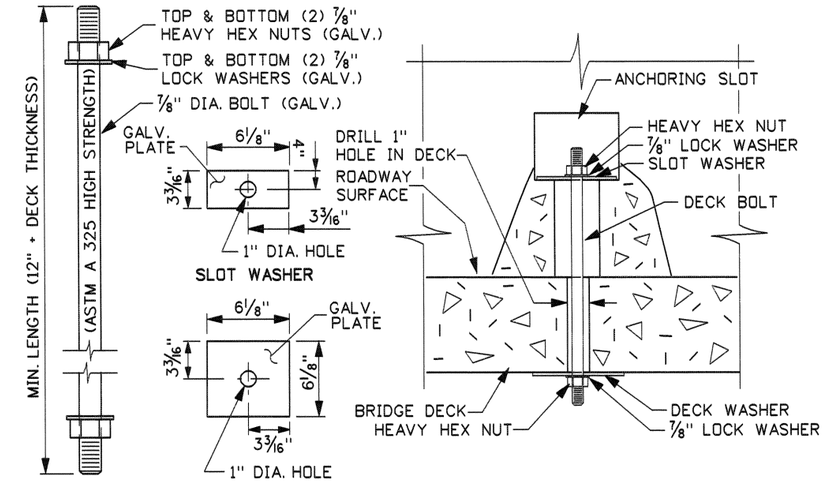

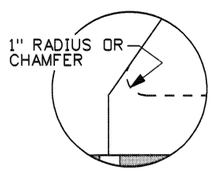

DETAIL A

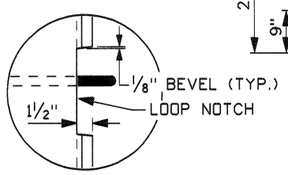

DETAIL B

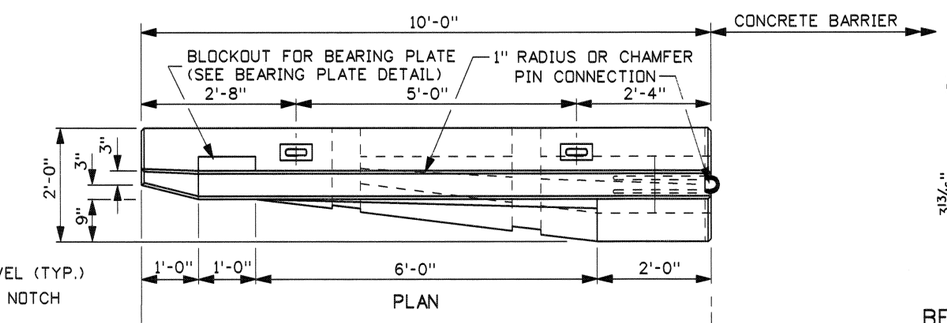

PLAN

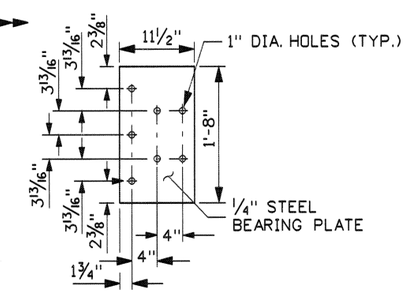

BEARING PLATE DETAIL

(SEE NOTE NO. 6)

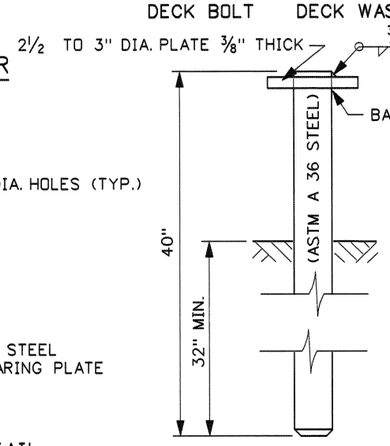

STABILIZATION PIN

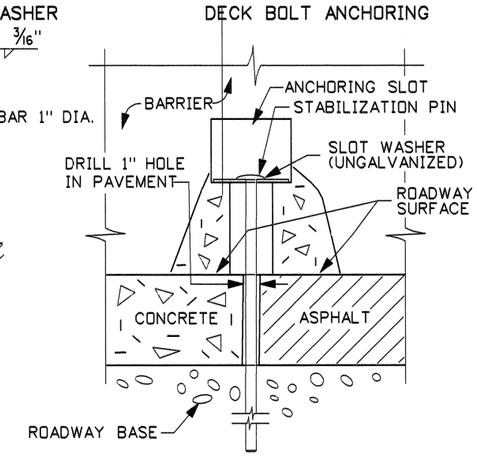

STABILIZATION PIN ANCHORING

ANCHORING ASSEMBLIES

(SEE NOTE NO. 3)

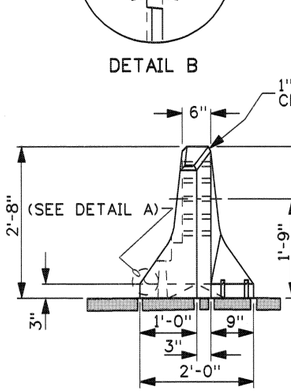

FRONT END VIEW

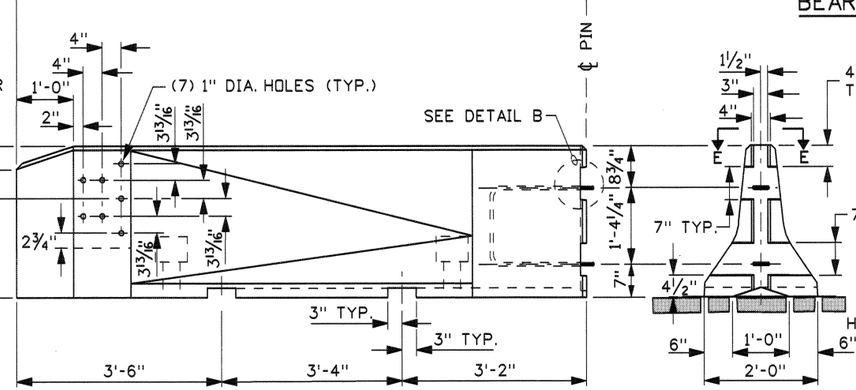

ELEVATION

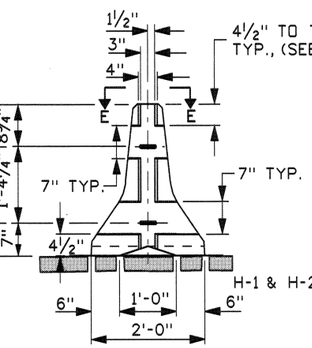

CONNECTION END VIEW

BARRIER DETAILS

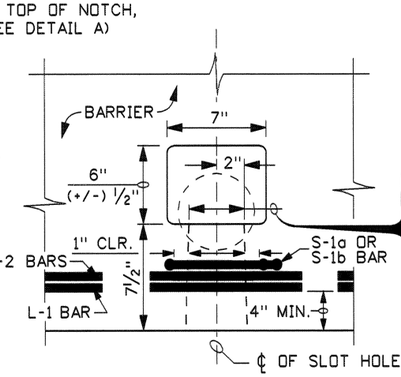

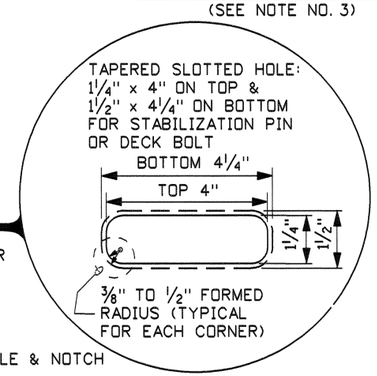

ANCHORING SLOT DETAILS

REVISIONS								
NO.	DATE	BY	NO.	DATE	BY	NO.	DATE	BY
1	6-80		6	12-94	MSM	11	11-04	MSM
2	5-82		7	2-96	MSM			
3	7-88	GB	8	5-99	MSM			
4	1-91	GB	9	10-02	MSM			
5	12-92	MSM	10	4-04	MSM			

SCALES SHOWN ARE FOR 11" X 17" PRINTS ONLY

CADD FILE NAME g2d_1104.std

DRWG. ORIG. DATE: AUGUST, 1977

IDAHO TRANSPORTATION DEPARTMENT

BOISE IDAHO

ASSISTANT CHIEF ENGINEER (DEVELOPMENT)

CHIEF ENGINEER

STANDARD DRAWING

CONCRETE BARRIER TO THRIE BEAM GUARDRAIL CONNECTOR

REQUIRES SHEET 2 OF 2 & STD. DWGS. G-1-E & G-2-A-1 OR G-2-A-2

English

STANDARD DRWG. NO.

G-2-D

SHEET 1 OF 2

PROFESSIONAL ENGINEER REGISTERED 2240 11/5/04 STATE OF IDAHO MILFORD L. MILLER

(* b & * c) G-2-D METAL REINFORCEMENT TABLE

MARK	LOCATION	BAR SIZE	(NO. BARS)	BAR LENGTH	SKETCH
H-1	HORIZ. IN BARRIER TIED TO INSIDE BACK OF V-3a,V-3b, & V-3c BARS	NO. 5	(3)	9'-6"	9'-6"
H-2	HORIZ. IN BARRIER TIED TO INSIDE FRONT OF V-3a, V-3b, & V-3c BARS	NO. 5	(2)	8'-9"	8'-9"
V-1	TIED UNDER V-3a THRU V-3b & SET BETWEEN CONN. LOOPS, TOP TIED ON V-2	NO. 5	(1)	13'-0"	2" R; 8'-4"; 2" R; 2'-2"; 2'-0"; 8'-9" (+/-) O.to O.
V-2	VERT. IN BARRIER END, TIED TO V-1, & TO TOP OF LOOP V-3c	NO. 5	(1)	6'-0"	2" R; 9"; 1'-3"; 160°; 110°; 1'-9"; 2'-4" O.to O.; 2" R; 1'-9"
V-3a	(VERT. IN BARRIER (3) IN TRAILING END, (2) CENTERED OVER TRAILING ANCHORING SLOT	NO. 5	(3)	4'-8"	2" R; 2'-0½"; 12°; 2'-0½"; 4" O.to O.; 9" (+/-) ½" O.to O.
V-3b	VERT. IN BARRIER (2) CENTERED OVER APPROACHING ANCHORING SLOT	NO. 5	(2)	4'-7"	2" R; 2'-0"; 6°; 2'-0½"; 4" O.to O.; 6 (+/-) ½" O.to O.
V-3c	VERT. IN BARRIER AT APPROACHING END OF BARRIER	NO. 5	(1)	4'-4"	2" R; 1'-10¾"; 6°; 1'-10½"; 4" O.to O.; 6 (+/-) ½" O.to O.
L-1	HORIZ. IN BARRIER BASE, FRONT END TIED TO V-2 BOTTOM	NO. 5	(1)	20'-0"	8'-0"; 2" R; 4" R; 7° TO 7¼°; 1' MIN. OVERLAP; 4" R; 1'-5"; 6'-7"; 1'-3½"; 2" R
S-1a	HORIZ. AROUND TRAILING ANCHOR SLOT	NO. 4	(1)	5'-3"	1½" R; SLOT; 1' MIN. OVRLP; 1" MIN. CLEAR TO BAR; (5'-3" BAR W/(4) 1½" R BENDS & MIN. 1'-0" OVERLAP); 8"; 1'-6½"; O.to O.
S-1b	HORIZ. AROUND APPROACHING ANCHOR SLOT	NO. 4	(1)	4'-5"	1½" R; SLOT; 8" MIN OVRLP.; 1" MIN. CLEAR TO BAR; (4'-5" BAR W/(4) 1½" R BENDS & MIN. 8" OVERLAP); 8"; 11"; O.to O.

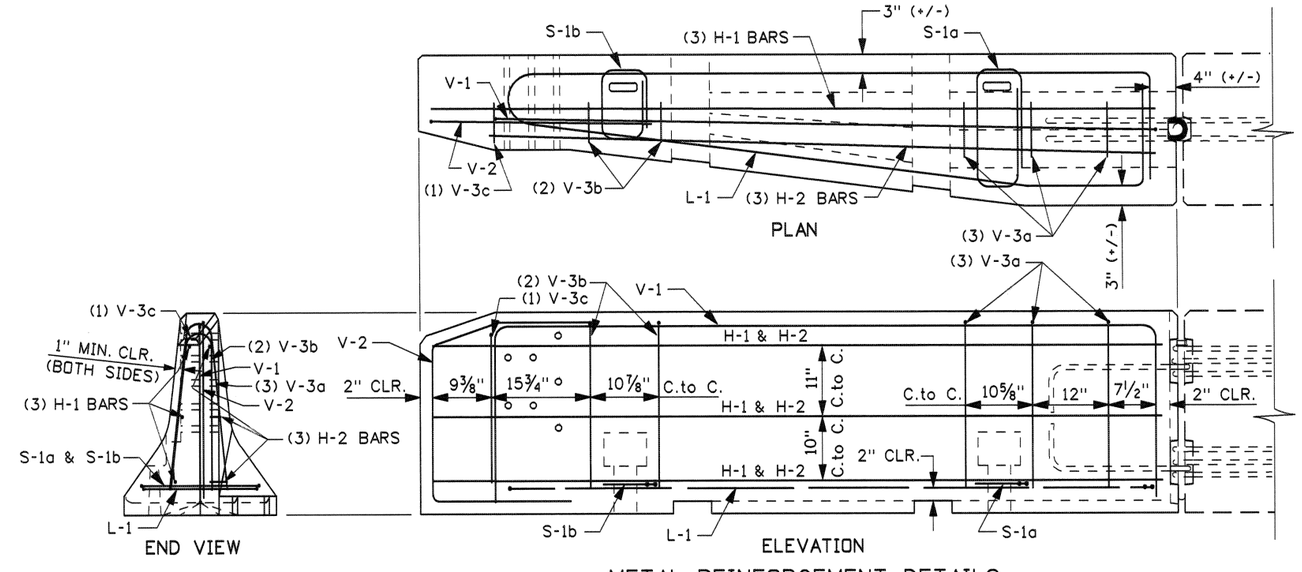

METAL REINFORCEMENT DETAILS

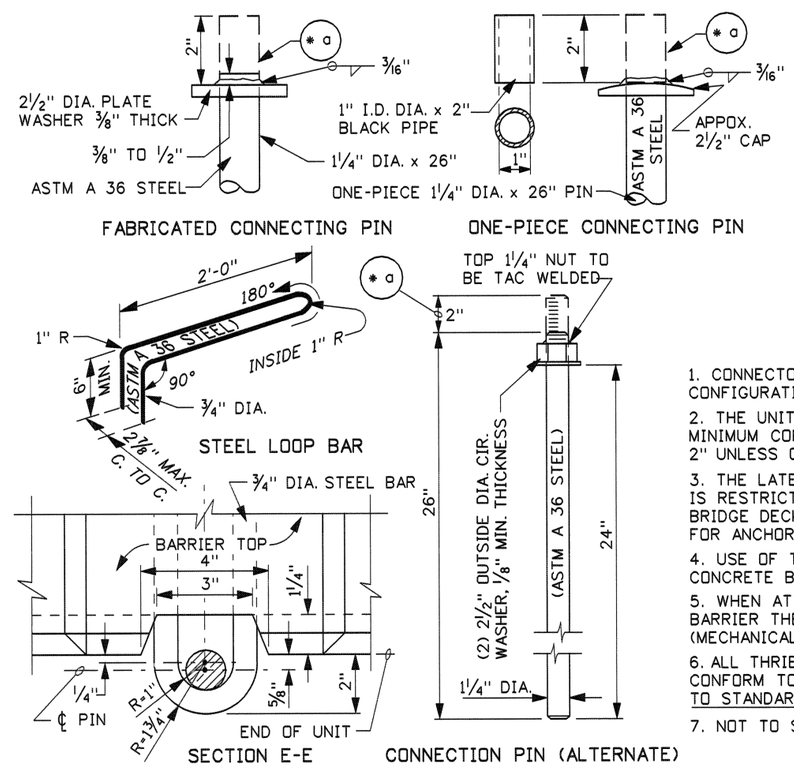

CONNECTION DETAILS

SUB-NOTES

* a WITH DELINEATOR ATTACHED: REQUIRES CONNECTING PIN 1¼" DIA. x 28" LONG, REFER TO STD. DWG. G-3-A.
* b ALL METAL REINFORCEMENT BENDS ARE TO BE ACCORDING TO THE LATEST A.C.I. STANDARD PRACTICE AND AASHTO SPECIFICATIONS.
* c DIMENSIONS SHOWN IN THE "METAL REINFORCEMENT TABLE" ARE OUT-TO-OUT (O.to O.) OF BEND POINTS AND/OR END OF BARS UNLESS OTHERWISE NOTED.

NOTES

1. CONNECTORS SHALL BE FURNISHED AS SHOWN OR OPPOSITE HAND CONFIGURATION AS REQUIRED BY THE SITE.
2. THE UNIT SHALL BE PRECAST USING CONCRETE CLASS 40B. THE MINIMUM CONCRETE COVER OVER REINFORCEMENT STEEL SHALL BE 2" UNLESS OTHERWISE NOTED.
3. THE LATERAL MOVEMENT OF THIS BARRIER TRANSITION SECTION IS RESTRICTED AND SHALL BE ANCHORED TO ROADWAY SURFACE OR BRIDGE DECK. REFER TO STANDARD DRAWING G-2-A-1 OR G-2-A-2 FOR ANCHORING NOTES AND DETAILS.
4. USE OF THIS CONNECTOR IS ALLOWED WITH ITD'S 10' AND 20' CONCRETE BARRIER.
5. WHEN ATTACHING THE CONNECTOR TO 10' OR 20' CONCRETE BARRIER THE EXPOSED CONNECTING LOOPS MAY NEED TO BE BENT (MECHANICALLY NOT WITH HEAT) TO FIT.
6. ALL THRIE-BEAM METAL GUARDRAIL AND ACCESSORIES SHALL CONFORM TO THE SPECIFICATIONS CONTAINED WITHIN THE "GUIDE TO STANDARDIZED HIGHWAY BARRIER HARDWARE".
7. NOT TO SCALE.

PROFESSIONAL ENGINEER REGISTERED 2240 11/5/04 STATE OF IDAHO MILFORD L. MILLER

REVISIONS								
NO.	DATE	BY	NO.	DATE	BY	NO.	DATE	BY
1	6-80		6	12-94	MSM	11	11-04	MSM
2	5-82		7	2-96	MSM			
3	7-88	GB	8	5-99	MSM			
4	1-91	GB	9	10-02	MSM			
5	12-92	MSM	10	4-04	MSM			

SCALES SHOWN ARE FOR 11" X 17" PRINTS ONLY

CADD FILE NAME g2d_1104.std

DRWG. ORIG. DATE: AUGUST, 1977

IDAHO TRANSPORTATION DEPARTMENT

BOISE IDAHO

ASSISTANT CHIEF ENGINEER (DEVELOPMENT)

CHIEF ENGINEER

STANDARD DRAWING

CONCRETE BARRIER TO THRIE BEAM GUARDRAIL CONNECTOR

REQUIRES SHEET 1 OF 2 & STD. DWGS. G-1-E & G-2-A-1 OR G-2-A-2

English

STANDARD DRWG. NO.

G-2-D

SHEET 2 OF 2