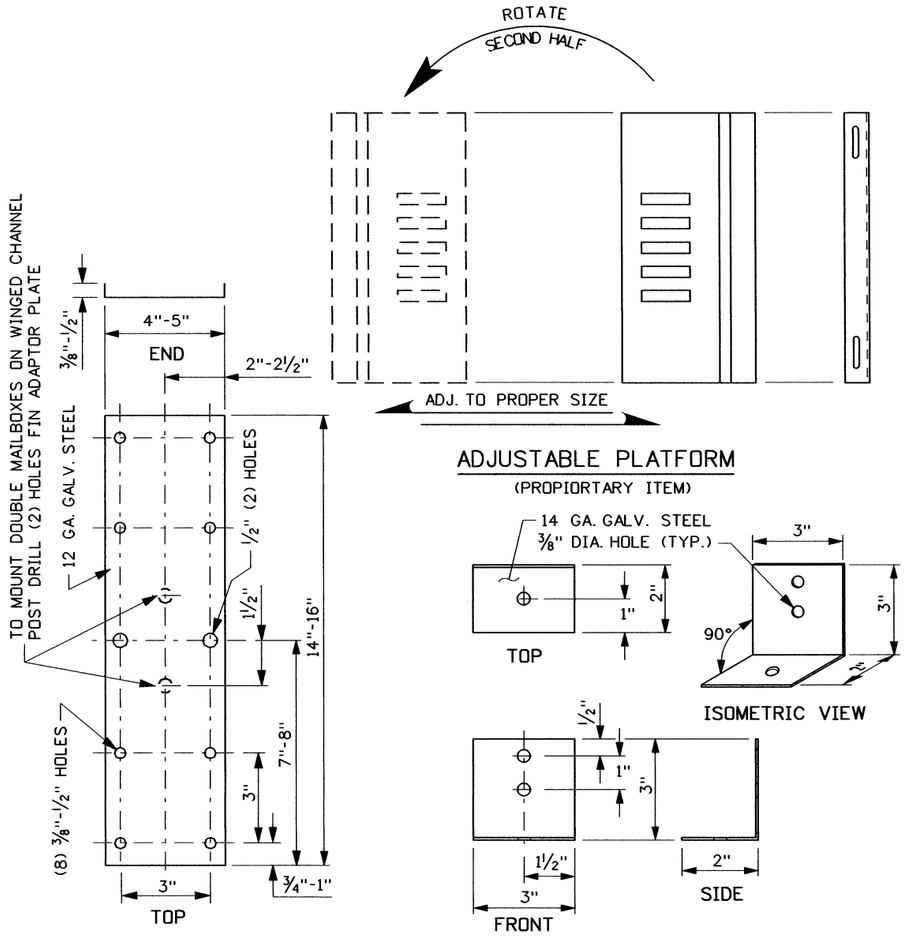

ADJUSTABLE PLATFORM

(PROPIORTARY ITEM)

WINGED CHANNEL POST ADAPTER PLATE

(NON-PROPRITORY)

ADJUSTABLE PLATFORM BRACKET

(NON-PROPRITORY)

MAILBOX PLATFORM DIMENSION TABLE						
SIZE	MAILBOX (INCHES)			PLATFORM (INCHES)		
	L	W	H	L'	W'	H'
1	19	6 1/2	8 1/2	17	6	1
1A	21	8	10 1/2	19	7 1/2	1
2	23 1/2	11 1/2	13 1/2	21	11	1

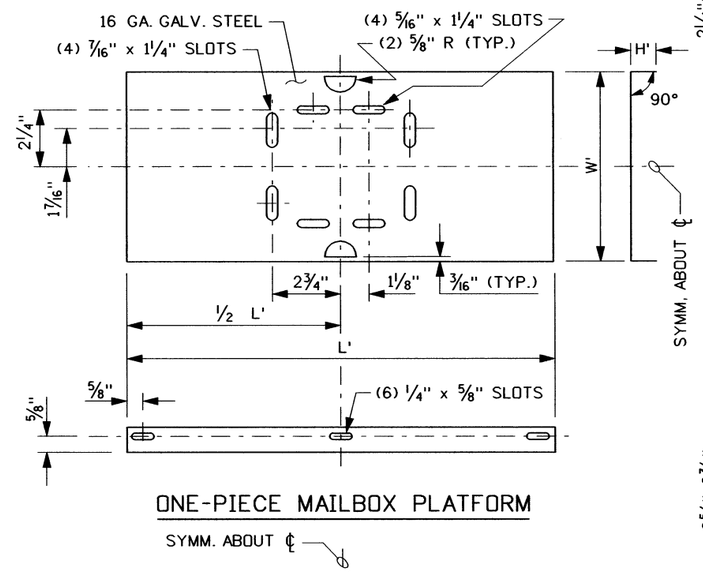

ONE-PIECE MAILBOX PLATFORM

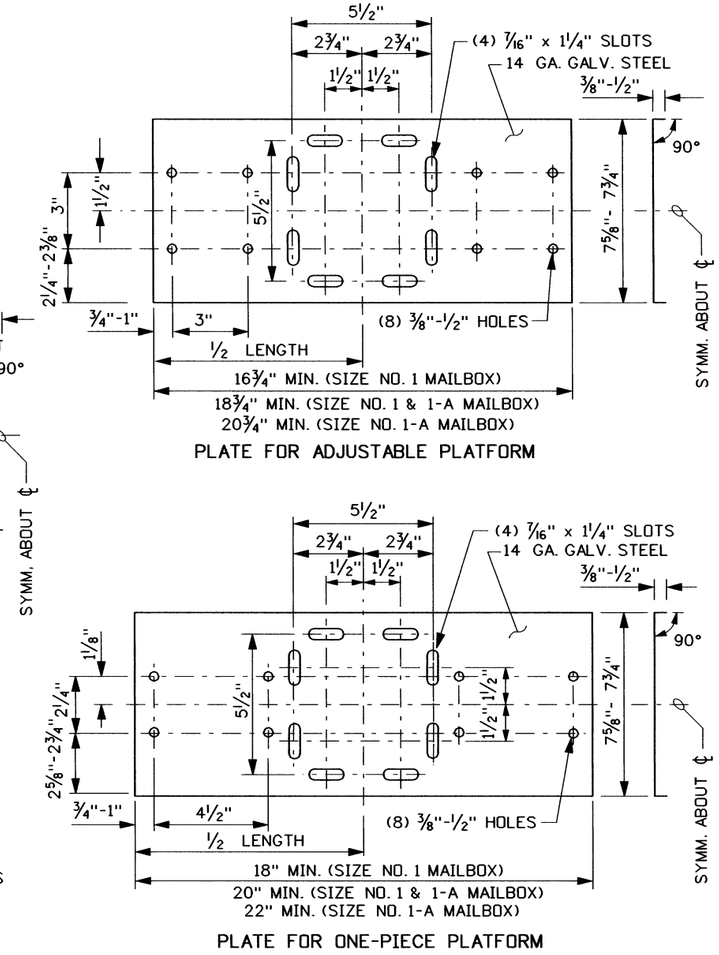

PLATE FOR ADJUSTABLE PLATFORM

PLATE FOR ONE-PIECE PLATFORM

ADAPTOR PLATES FOR DOUBLE MOUNT

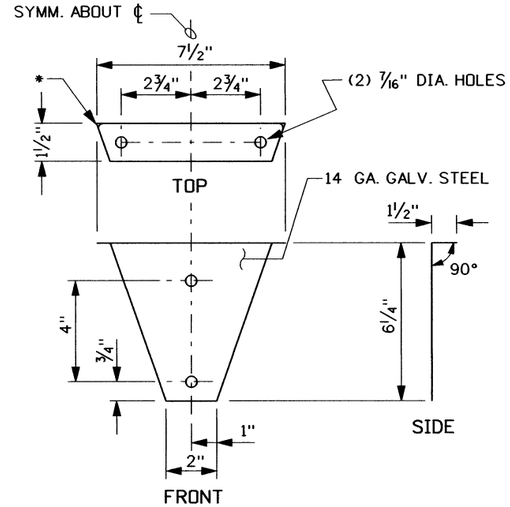

* IF NEEDED, GRIND-OFF OR BEND DOWN CORNERS OF BRACKET TO FIT INSIDE MAILBOX PLATFORM

BRACKET DETAIL

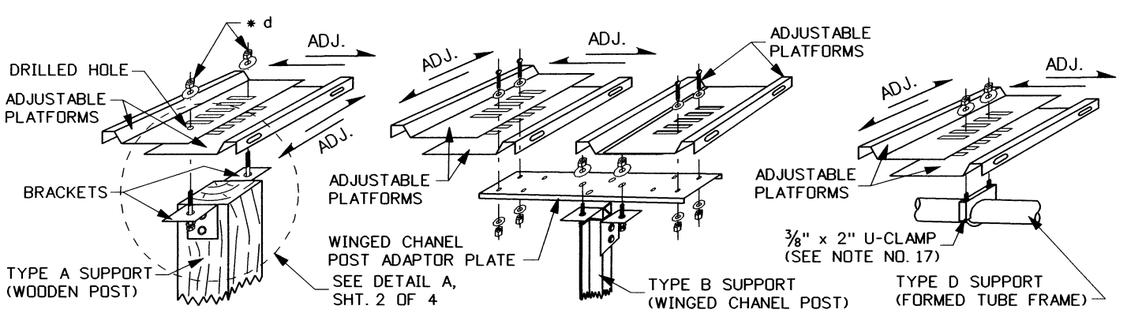

SINGLE MOUNT
(TYPE A OR C SUPPORT)

DOUBLE MOUNT
(TYPE A, B, & C SUPPORTS)
(SEE NOTE NOS. 8 & 15)

MULTIPLE MOUNT
(SEE NOTE NO. 13)

ADJUSTABLE PLATFORM INSTALLATION

(TYPE A, B, C, & D SUPPORTS)

GENERAL NOTES

1. ALL MAILBOX HARDWARE INCLUDING SUPPORTS, PLATFORMS, LOCKING WEDGES, ANTI-TWIST PLATES, ADAPTOR PLATES, BRACKETS, BOLTS, NUTS, SCREWS, WASHERS, AND OTHER MISCELLANEOUS HARDWARE SHALL BE GALVANIZED IN ACCORDANCE WITH ASTM DESIGNATIONS:
   A 153 - CLASS C/D OR B 454 - CLASS 40.
2. MAILBOX INSTALLATION AND HARDWARE SHALL MEET THE REQUIREMENTS OF SECTION 634 - MAILBOX, OF THE ITD STANDARD SPECIFICATIONS.
3. THE PLATFORM DESIGNS SHOWN ON THIS DRAWING FEATURE SLOTS THAT ACCOMMODATE SEVERAL TYPES OF MAILBOX SUPPORTS, ONLY THOSE SLOTS NECESSARY FOR ASSEMBLING THE TYPE OF SUPPORT BEING INSTALLED ARE REQUIRED. THE ADJUSTABLE PLATFORM MAY BE USED IN LIEU OF THE ONE-PIECE PLATFORM, BUT THE ADJUSTABLE PLATFORM BRACKET SHOWN ON THIS SHEET MUST BE USED IN CONJUNCTION. FIELD DRILLING MAY BE NECESSARY.

REVISIONS								
NO.	DATE	BY	NO.	DATE	BY	NO.	DATE	BY
1	7-92	MSM						
2	7-02	MSM						
3	7-05	MSM						
4	12-05	MSM						

SCALES SHOWN ARE FOR 11" X 17" PRINTS ONLY

CADD FILE NAME h5a_1205.std

DRWG. ORIG. DATE: JANUARY, 1992

IDAHO TRANSPORTATION DEPARTMENT

BOISE IDAHO

ASSISTANT CHIEF ENGINEER (DEVELOPMENT)

CHIEF ENGINEER

STANDARD DRAWING

MAILBOX ASSEMBLIES & MOUNTING HARDWARE

REQUIRES SHEET 2 OF 4, 3 OF 4, 4 of 4, & STD. DWG. H-4-B

English

STANDARD DRWG. NO.

H-5-A

SHEET 1 OF 4

PROFESSIONAL ENGINEER * LAND SURVEYOR REGISTERED 2240 12/19/05 STATE OF IDAHO MILFORD MILLER

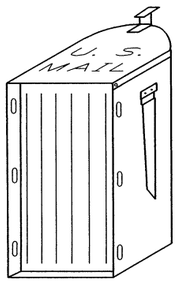

SIZE NO. 1 MAILBOX
(19" x 6½" x 8½")

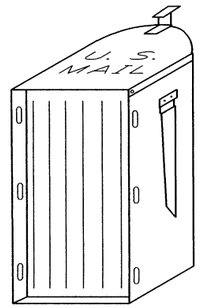

SIZE NO. 1-A MAILBOX
(21" x 8" x 10½")

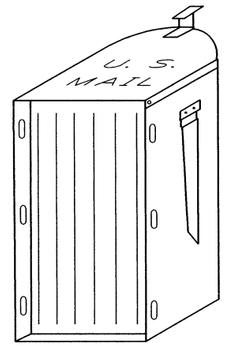

SIZE NO. 2 MAILBOX
(23½" x 11½" x 13½")

MAILBOX SIZES

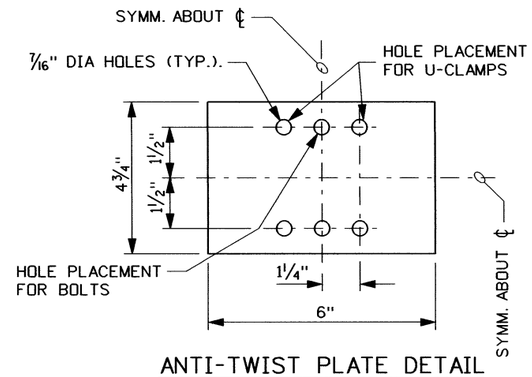

ANTI-TWIST PLATE DETAIL

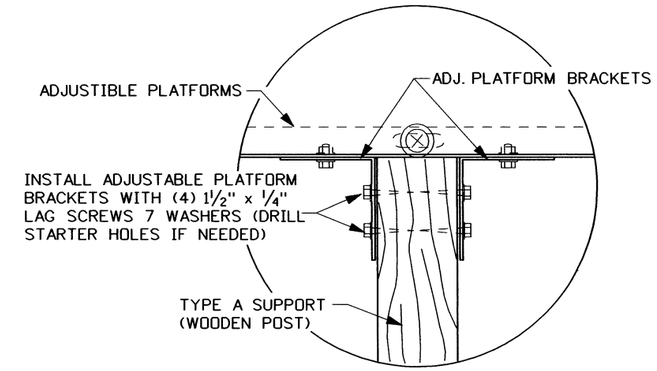

DETAIL A

SUB-NOTES - SHEET 2 OF 4
* a MINIMUM POST DEPTH, 24" IN NORMAL SOILS, 36" IN LOOSE MATERIAL, OR AS DIRECTED BY THE ENGINEER.
* b 24" TO 30" SAW OFF TOP FOR PROPER HEIGHT.
* c MAXIMUM (2) BOXES, ANY COMBINATION
* d EXTRA HOLES MUST BE DRILLED IN PLATFORM TO ACCOMMODATE MOUNTING BRACKETS ON POST.

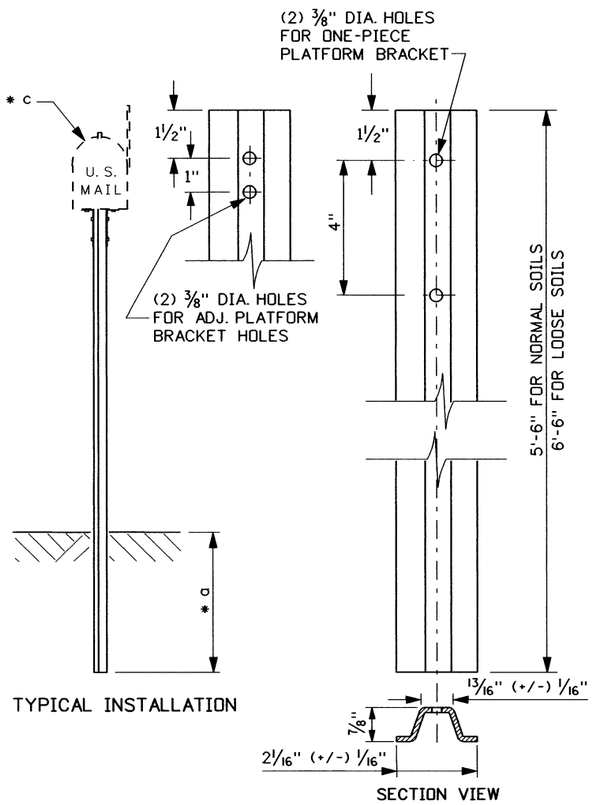

TYPICAL INSTALLATION

TYPE A SUPPORT - WINGED CHANNEL POST

* c SIZE NO. 1 & 1-A MAILBOXES
(SEE NOTE NOS. 5 & 11)

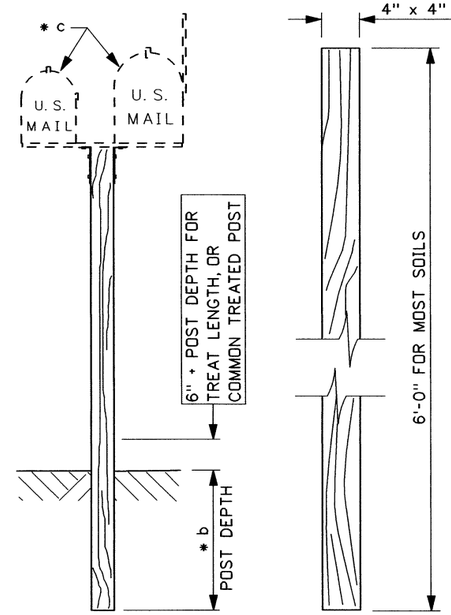

TYPICAL INSTALLATION

TYPE B SUPPORT - WOODEN POST

SIZE NO. 1, 1-A, & 2 MAILBOXES
(SEE NOTE NO. 6 & 11)

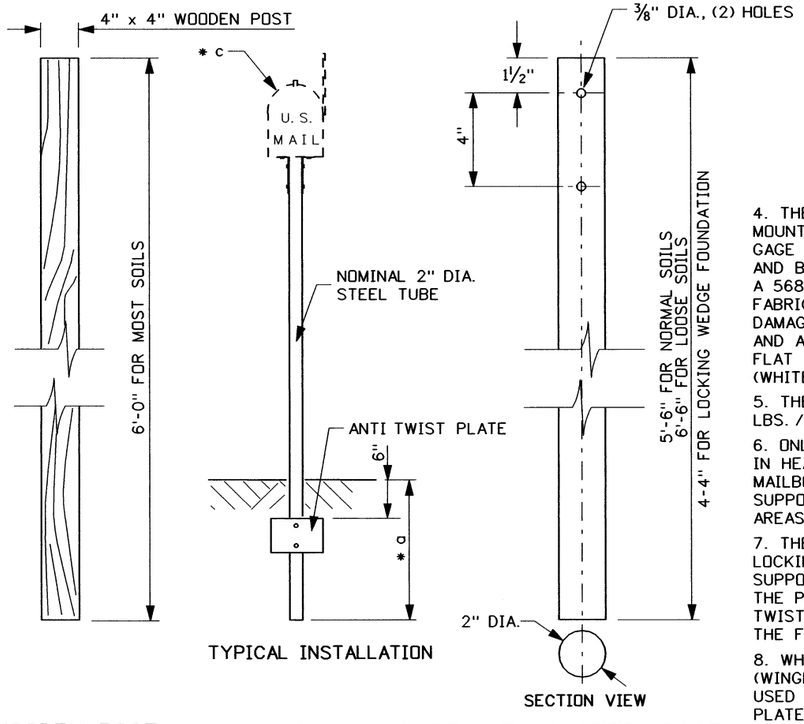

TYPICAL INSTALLATION

TYPE C SUPPORT - TUBE STEEL POST

SIZE NO. 1, 1-A, & 2 MAILBOXES
(SEE NOTE NO. 11)

GENERAL NOTES, CON'T.

4. THE ONE-PIECE MAILBOX PLATFORM, ADAPTOR PLATES FOR DOUBLE MOUNT, AND THE MOUNTING BRACKETS ARE TO BE CONSTRUCTED OF 16 GAGE GALVANIZED SHEET STEEL. THE PLATFORMS, ADAPTOR PLATES, AND BRACKETS SHALL BE GALVANIZED IN ACCORDANCE WITH ASTM A 568. WHEN A PLATFORM, ADAPTOR PLATE, OR ADAPTOR PLATE IS FABRICATED AFTER BEING GALVANIZED THE 90° BENDS SHALL NOT DAMAGE THE GALVANIZED COATING. THE BASE METAL OF THE BRACKET AND ADAPTER PLATE MUST HAVE SUFFICIENT DUCTILITY TO BE BENT FLAT UPON ITSELF WITHOUT BREAKING. ITEMS WITH WET STAINS (WHITE RUST) WILL NOT BE ACCEPTED.

5. THE TYPE B SUPPORT (WINGED CHANNEL POST), SHALL BE A 2 LBS. /FT. STEEL POST.

6. ONLY (1) MAILBOX IS RECOMMENDED FOR A TYPE A, B, & C SUPPORTS IN HEAVY SNOW AREAS. WHEN A SNOW SHIELD IS INSTALLED ONLY (1) MAILBOX IS ALLOWED PER THE TYPE A, B, & C SUPPORTS. THE TYPE B SUPPORT (4' x 4" WOODEN POST) IS RECOMMENDED IN HEAVY SNOW AREAS. FOR INSTALLATION OF SNOW SHIELDS SEE STD. DWG. H-5-B.

7. THE ANTI-TWIST PLATE MAY BE USED AS AN ALTERNATE FOR THE LOCKING WEDGE FOUNDATION (SHOWN ON SHT. 3 OF 4) ON TYPE C & D SUPPORTS. TO USE THE ANTI-TWIST PLATE ON THE TYPE C SUPPORT THE POST LENGTH MUST BE 5'-6" OR 6'-6" LONG. WHEN THE ANTI-TWIST PLATE IS USED WITH THE TYPE D SUPPORT THAT PORTION OF THE FORMED TUBE FRAME IN THE GROUND MUST BE 24" TO 30" LONG.

8. WHEN MOUNTING THE ADJUSTABLE PLATFORM ON THE TYPE B SUPPORT (WINGED CHANNEL POST) THE ADJUSTABLE PLATFORM BRACKET MUST BE USED AND FOR A DOUBLE MOUNT THE ADJUSTABLE PLATFORM ADAPTOR PLATE MUST BE USED (NOTE: THESE TWO ITEMS ARE ACCEPTABLE TO USE WITH TYPE A SUPPORT (WOODEN POST)).

PROFESSIONAL ENGINEER * LAND SURVEYOR
REGISTERED
2240
12/19/05
STATE OF IDAHO
MILFORD MILLER

REVISIONS								
NO.	DATE	BY	NO.	DATE	BY	NO.	DATE	BY
1	7-92	MSM						
2	7-02	MSM						
3	7-05	MSM						
4	12-05	MSM						

SCALES SHOWN ARE FOR 11" X 17" PRINTS ONLY

CADD FILE NAME h5a_1205.std

DRWG. ORIG. DATE: JANUARY, 1992

IDAHO TRANSPORTATION DEPARTMENT

BOISE IDAHO

ASSISTANT CHIEF ENGINEER (DEVELOPMENT)

CHIEF ENGINEER

STANDARD DRAWING

MAILBOX ASSEMBLIES & MOUNTING HARDWARE

REQUIRES SHEET 1 OF 4, 3 OF 4, 4 OF 4, & STD. DWG. H-4-B

English

STANDARD DRWG. NO.

H-5-A

SHEET 2 OF 4

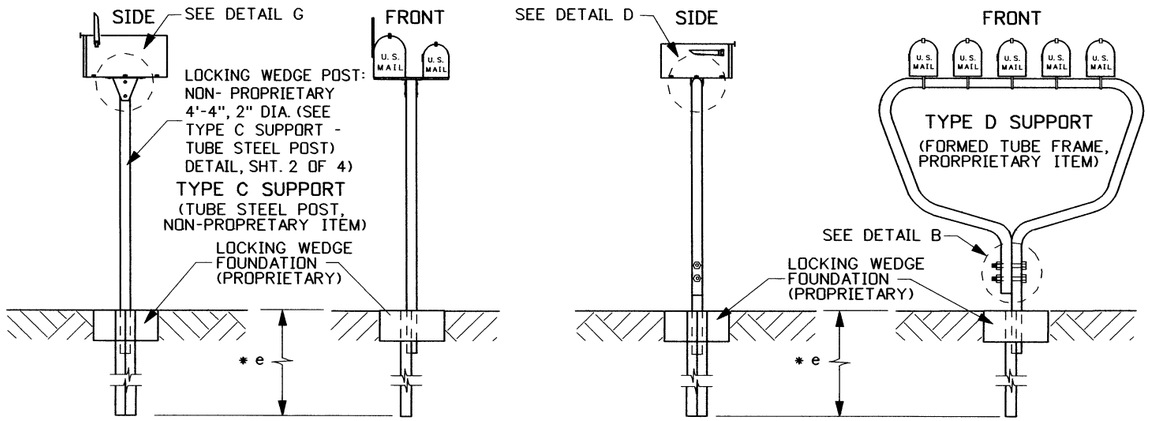

LOCKING WEDGE FOUNDATION - TYPE C & D SUPPORTS

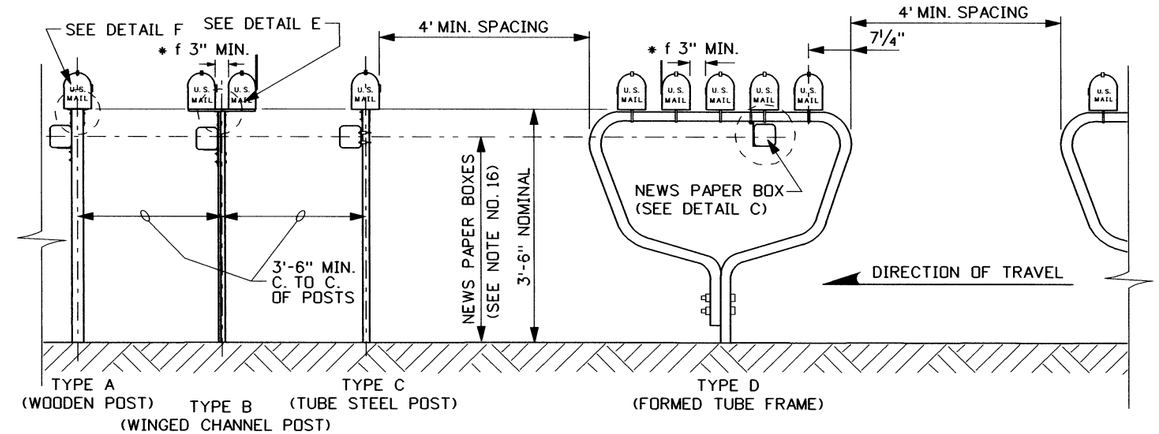

MAILBOX PLACEMENT DIMENSIONS

(SEE NOTE NO. 10)

SUB-NOTES - SHEET 3 OF 4
* e MINIMUM ANGLE DEPTH, AS MNFR'S. REQUIREMENTS
* f MIN. SPACING BETWEEN BOXES IS 3"

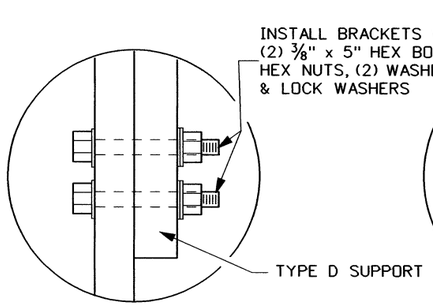

DETAIL B

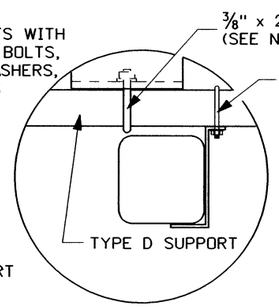

DETAIL C

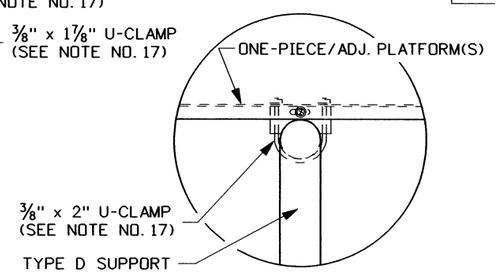

DETAIL D

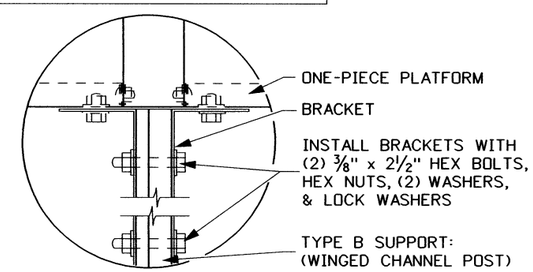

DETAIL E

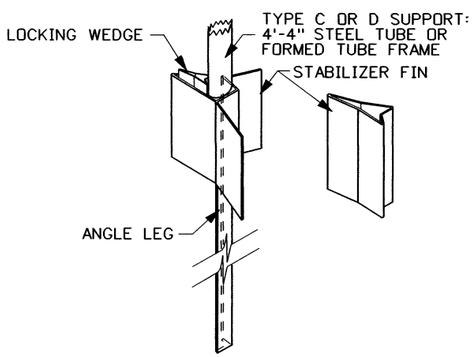

PERSPECTIVE VIEW

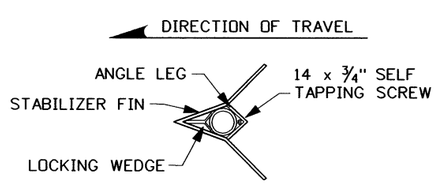

TOP VIEW

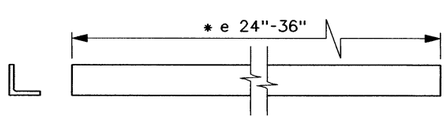

ANGLE LEG

ALTERNATE LOCKING WEDGE FOUNDATION

(e. i. V-LOC SYSTEM - FOR TYPE C & D SUPPORTS)

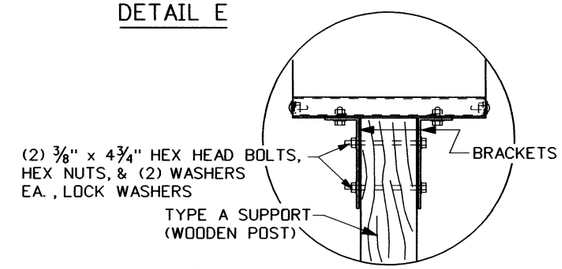

DETAIL F

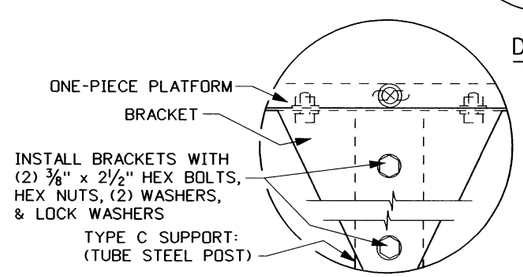

DETAIL G

GENERAL NOTES, CON'T.

9. ON SUPPORT TYPES A, B, & C SINGLE MOUNT (1) MAILBOX SIZE NOS. 1, 1-A, OR 2 AND DOUBLE MOUNT NO MORE THAN (2) SIZE NOS. 1, 1-A, OR 2 MAILBOXES. ON THE TYPE D SUPPORT (FORMED TUBE FRAME) MOUNT NO MORE THAN (5) SIZE NO. 1 MAILBOXES, (4) SIZE NO. 1 & 1-A MAILBOXES, OR (3) IN ANY COMBINATION OF SIZE NOS. 1, 1-A, & 2 MAILBOXES.

10. THE MINIMUM SPACING FOR TYPE A, B, & C SUPPORTS IS 3'-6" CENTER OF POST TO CENTER OF POST. THE TYPE D SUPPORT (FORMED TUBE FRAME) MINIMUM SPACING IS 4' FROM EDGE OF FRAME TO EDGE OF FRAME.

11. ALL MAILBOX SUPPORTS MUST BE SET PLUMB AND THE WINGED CHANNEL POST MUST BE DRIVEN PLUMB. THE RECOMMENDED PROCEDURE TO DRIVE THE WINGED CHANNEL POST IS: DRIVE THE POST ABOUT 10-12 INCHES, STOP AND CHECK FOR STRAIGHTNESS, FRONT TO BACK, SIDE TO SIDE, MAKE ADJUSTMENT, CONTINUE TO DRIVE AN ADDITIONAL 10-12 INCHES, REPEAT CHECK, MAKE FINAL ADJUSTMENT AND COMPLETE INSTALLATION.

12. THE LOCKING WEDGE FOUNDATION SYSTEM THAT MEETS THE NCHRP 350 CRASH TEST CRITERIA MAY BE SUBSTITUTED IN LIEU OF THE ANTI-TWIST PLATE DESIGNS SHOWN.

13. THE TYPE D SUPPORT (FORMED TUBE FRAME) AND LOCKING WEDGE FOUNDATION ARE PROPRIETARY ITEMS TO BE OBTAINED FROM A COMMERCIAL SUPPLIER. INSTALL THESE ITEMS IN ACCORDANCE WITH THE MANUFACTURER'S INSTRUCTIONS.

14. ANY COMMERCIALLY AVAILABLE MAILBOX AND/OR POST MAY BE USED IF IT MEETS THE REQUIREMENTS OF THE POST OFFICE AND HAS PASSED THE CRITERIA GIVEN IN NCHRP 350 TESTING PROCEDURE FOR ROADSIDE APPURTENANCES (SEE NCHRP 350 REPORT, 4.2.2.4. SUPPORT STRUCTURES, WORK ZONE TRAFFIC CONTROL DEVICES, AND BREAKAWAY UTILITY POLES).

15. THE ADJUSTABLE PLATFORM SHALL BE USED IN CONJUNCTION WITH THE ADJUSTABLE PLATFORM BRACKET, AND/OR THE ADJUSTABLE PLATFORM ADAPTOR PLATE THE ADJUSTABLE PLATFORM MAY BE USED WITH THE TYPE A, B, & C SUPPORTS.

16. ATTACH A NEWSPAPER BOX DIRECTLY UNDER MAILBOX TO SUPPORT. USE BOLTS, LAG SCREWS, OR U-CLAMPS TO ATTACH TO APPROPRIATE TYPE OF SUPPORT. NEWSPAPER BOXES MUST NOT EXTEND BEYOND THE FRONT OF THE MAILBOX WHEN THE MAILBOX DOOR IS CLOSED. IN HEAVY SNOW AREAS LOCATE NEWSPAPER BOX ON TRAILING EDGE OF POST OR SUPPORT.

PROFESSIONAL ENGINEER * LAND SURVEYOR
REGISTERED
2240
12/19/05
STATE OF IDAHO
MILFORD MILLER

REVISIONS								
NO.	DATE	BY	NO.	DATE	BY	NO.	DATE	BY
1	7-92	MSM						
2	7-02	MSM						
3	7-05	MSM						
4	12-05	MSM						

SCALES SHOWN ARE FOR 11" X 17" PRINTS ONLY

CADD FILE NAME h5a_1205.std

DRWG. ORIG. DATE: JANUARY, 1992

IDAHO TRANSPORTATION DEPARTMENT

BOISE IDAHO

CHIEF ENGINEER

ASSISTANT CHIEF ENGINEER (DEVELOPMENT)

CHIEF ENGINEER

STANDARD DRAWING

MAILBOX ASSEMBLIES & MOUNTING HARDWARE

REQUIRES SHEET 1 OF 4, 2 OF 4, 4 OF 4, & STD. DWG. H-4-B

English

STANDARD DRWG. NO.

H-5-A

SHEET 3 OF 4

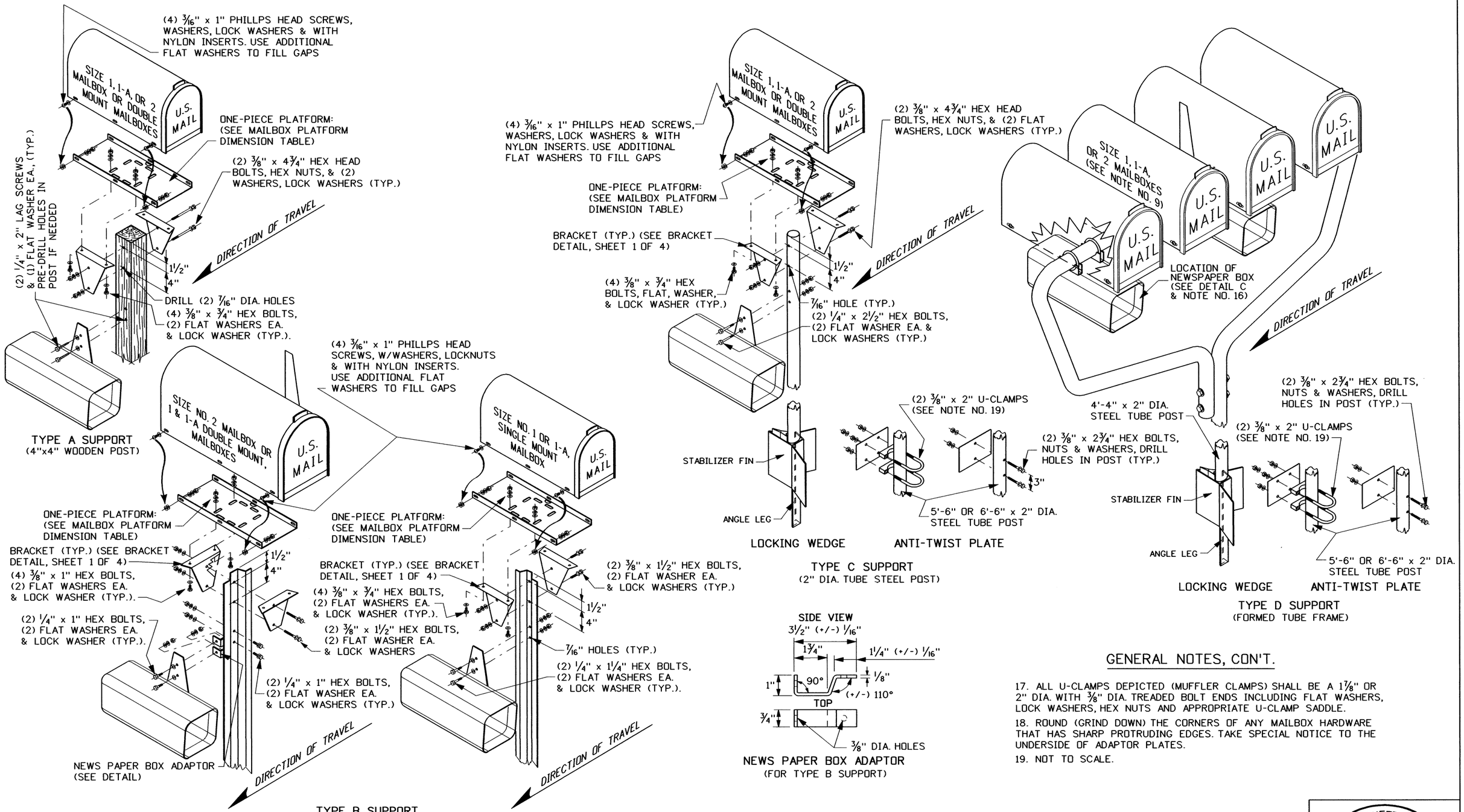

MAILBOX SUPPORT ASSEMBLY DETAILS

GENERAL NOTES, CON'T.

17. ALL U-CLAMPS DEPICTED (MUFFLER CLAMPS) SHALL BE A 1 7/8" OR 2" DIA. WITH 3/8" DIA. TREADED BOLT ENDS INCLUDING FLAT WASHERS, LOCK WASHERS, HEX NUTS AND APPROPRIATE U-CLAMP SADDLE.
18. ROUND (GRIND DOWN) THE CORNERS OF ANY MAILBOX HARDWARE THAT HAS SHARP PROTRUDING EDGES. TAKE SPECIAL NOTICE TO THE UNDERSIDE OF ADAPTOR PLATES.
19. NOT TO SCALE.

REVISIONS								
NO.	DATE	BY	NO.	DATE	BY	NO.	DATE	BY
1	7-92	MSM						
2	7-02	MSM						
3	7-05	MSM						
4	12-05	MSM						

SCALES SHOWN ARE FOR 11" X 17" PRINTS ONLY

CADD FILE NAME h5a_1205.std

DRWG. ORIG. DATE: JANUARY, 1992

IDAHO TRANSPORTATION DEPARTMENT

BOISE IDAHO

ASSISTANT CHIEF ENGINEER (DEVELOPMENT)

CHIEF ENGINEER

STANDARD DRAWING

MAILBOX ASSEMBLIES & MOUNTING HARDWARE

REQUIRES SHEET 1 OF 4, 2 OF 4, 3 OF 4, & STD. DWG. H-4-B

English

STANDARD DRWG. NO.

H-5-A

SHEET 4 OF 4

PROFESSIONAL ENGINEER * LAND SURVEYOR REGISTERED 2240 12/19/05 STATE OF IDAHO MILFORD MILLER