GENERAL NOTES

SEE SIGNING ERECTION SPECIFICATIONS FOR BASE BRACKET NUMBER AND DIMENSIONS "G", "H", "P", "Q", AND "R".

INSTALLATION NOTES

WRENCH SIZES REQUIRED: 1 -1/16 ", 1-1/4", 1-7/16", 1-5/8"

BRACKET ASSEMBLY

ALL BRACKETS TO BE PERMANENTLY LABELED WITH APPROPRIATE BRACKET TYPE AND BRACKET SELECTION NUMBER.

THE BRACKET NUMBER IS USUALLY GIVEN IN THE SIGNING ERECTION SPECIFICATIONS. IF NOT SHOWN, THE BRACKET NUMBER MAY BE DETERMINED FROM THE BRACKET SELECTION TABLE SHOWN BELOW. LOCATE THE INTERSECTION OF THE SIGN MOUNTING HEIGHT (DIMENSION "G") AND THE POST LENGTH (DIMENSION "P") IN THE BRACKET SELECTION TABLE. THE INTERSECTION WILL BE EITHER IN ZONE 1, 2, OR 3 WHICH CORRESPONDS TO BRACKET NUMBERS 1, 2, AND 3.

ASSEMBLE BRACKETS TO POST WITH BOLTS PROVIDED. SQUARE AND TIGHTEN ITEMS (1) (2) (3) (4) (5) (6) AND (7). MAKE AS TIGHT AS POSSIBLE WITH CONVENTIONAL WRENCHES.

TYPE A-8 POST — W12-14

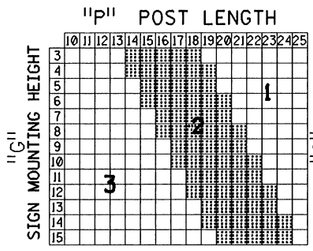

TYPE A-9 POST — W14-22

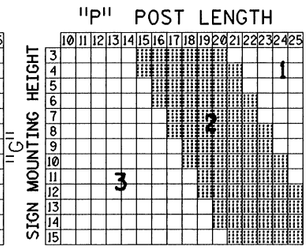

BRACKET SELECTION TABLE FOR BREAKSAFE BASE TYPE B-650-LP

POST DIMENSIONS					
POST TYPE	SIZE & WEIGHT	DEPTH	WEBB THICK-NESS	FLANGE WIDTH	FLANGE THICK-NESS
A-8	W12-14	11 7/8"	3/16"	4"	1/4"
A-9	W14-22	13 3/4"	1/4"	5"	5/16"

HINGE ASSEMBLY

BUTT UPPER AND LOWER POSTS TOGETHER ON FLAT SURFACE.

PLACE HINGE PLATES (13) ON OUTER FLANGES AND SECURE WITH 3/4" -UNC BOLTS (14) (15) AND (16) - SNUG BUT DO NOT TIGHTEN.

MAKE SURE UPPER AND LOWER POSTS ARE IN ALIGNMENT; THEN TIGHTEN ALL NUTS (16) TO PROOF LOAD - 1/2 OF A TURN BEYOND SNUG.

ANCHOR ASSEMBLY

ASSEMBLE COUPLING ANCHORS (12) TO INSTALLATION TEMPLATE, SEE STANDARD DRAWING I-8-C-2.

LOWER ENTIRE ANCHOR ASSEMBLY INTO FRESH CONCRETE AND VIBRATE INTO POSITION SO THAT THE TOPS OF THE INDIVIDUAL ANCHORS (12) ARE FLUSH WITH THE FINISHED TOP SURFACE OF THE FOOTINGS. ALIGN AND LEVEL THE TEMPLATE AND KEEP IN PLACE UNTIL CONCRETE HAS SET.

COUPLING ASSEMBLY

SUSPEND POST OVER FOOTING AND INSERT SPECIAL BOLTS (8) THROUGH BRACKETS (1).

BELOW BRACKET, THREAD COUPLINGS (9) INTO ANCHORS (12) BUT LEAVE LOOSE.

LOWER POST WITH SPECIAL BOLTS (8) ONTO LOOSE COUPLINGS (9) AND THREAD SPECIAL BOLTS INTO COUPLINGS. THREAD COUPLINGS ALL THE WAY INTO ANCHORS (12).

TIGHTEN SPECIAL BOLTS (8) WITH 1-5/8" WRENCH AND MAKE AS TIGHT AS POSSIBLE WITH CONVENTIONAL WRENCHES. **NOTE!** DO NOT PLACE TORQUE ACROSS NECKED DOWN PORTION OF COUPLING - WRENCH FLATS ARE PROVIDED ON EITHER SIDE FOR PROPER TIGHTENING.

IF POST IS NOT PLUMB, INSERT SHIMS (10) AND (11) BETWEEN COUPLINGS (9) AND ANCHORS (12).

NO MORE THAN TWO SHIMS UNDERNEATH ANY ONE COUPLING AND NO MORE THAN THREE SHIMS UNDERNEATH ANY TWO COUPLINGS.

BREAKSAFE BASE ASSEMBLY TYPE B-650-LP

ITEM	PARTS DESCRIPTION		QTY. POST
(1)	Bracket	Alum.(See Bracket Selection Table)	2
(2)	Bolt	Top, 5/8"-13 UNCx2-3/4", Hex.Hd.	4
(3)	Bolt	Middle, 5/8"-13 UNCx3", Hex.Hd.	4
(4)	Bolt	Bottom, 5/8"-13 UNCx3 1/4", Hex.Hd.	4
(5)	Cap Screw	Bracket, 5/8"-13 UNCx1-1/4", Hex.Hd.	4
(6)	Lockwasher	5/8" Galvanized	16
(7)	Nut	Hex. 5/8"-13 UNC	12
(8)	Special Bolt	1-8 UNC.	4
(9)	Coupling	Large, 1-8 UNC, 2A & 2B	4
(10)	Shim	Horseshoe, 18 Gauge Galv.	2
(11)	Shim	Horseshoe, 14 Gauge Galv.	2
(12)	Anchor	1-8 UNC	4
(13)	Hinge Plate	Large, .113" Section	4
(14)	Bolt	Hinge, 3/4"-10 UNCx2-1/4", Hex.Hd.	8
(15)	Lockwasher	3/4" Galvanized	8
(16)	Nut	Hex 3/4"-10 UNC	8

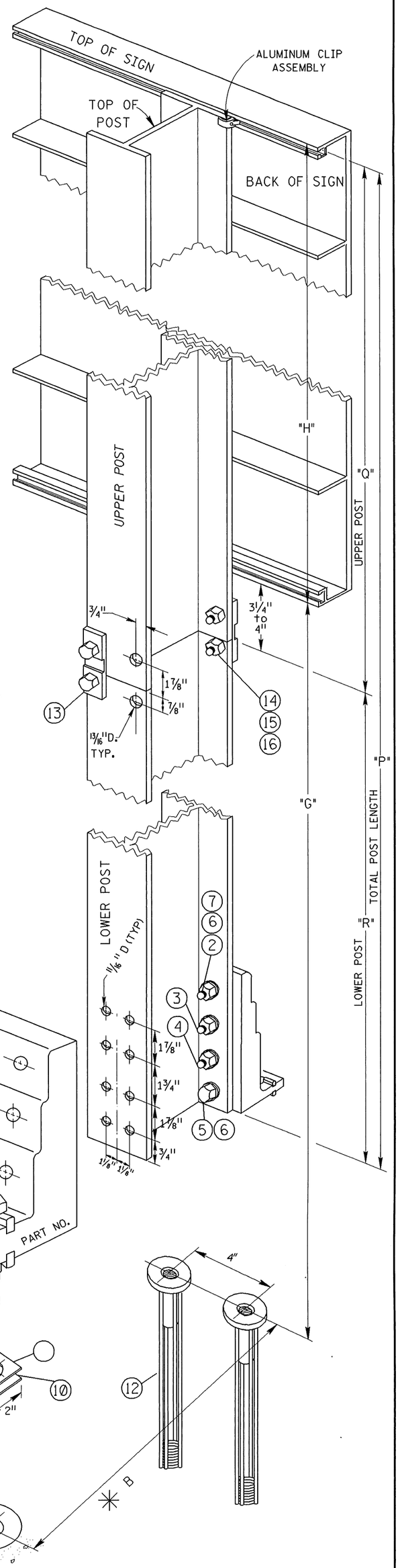

NO.	DATE	BY	NO.	DATE	BY	NO.	DATE	BY	NO.	DATE	BY
1	08-96	HEB									
2	12-99	HEB									

REVISIONS

SCALES SHOWN ARE FOR 11" x 17" PRINTS ONLY

CADD FILE NAME 18c11299.std

DRAWING DATE: APRIL, 1992

IDAHO TRANSPORTATION DEPARTMENT

BOISE, IDAHO

ASSISTANT CHIEF ENGINEER (DEVELOPMENT)

CHIEF ENGINEER

STANDARD DRAWING

BREAKAWAY SIGN POST INSTALLATION TYPE A-8 & A-9

REQUIRES STD. DWG. I-8-C-2

STANDARD DRAWING NO. I-8-C-1

SHEET 1 OF 1

PROFESSIONAL ENGINEER REGISTERED MICHAEL R. VILLNAVE 9352 STATE OF IDAHO 12/23/99