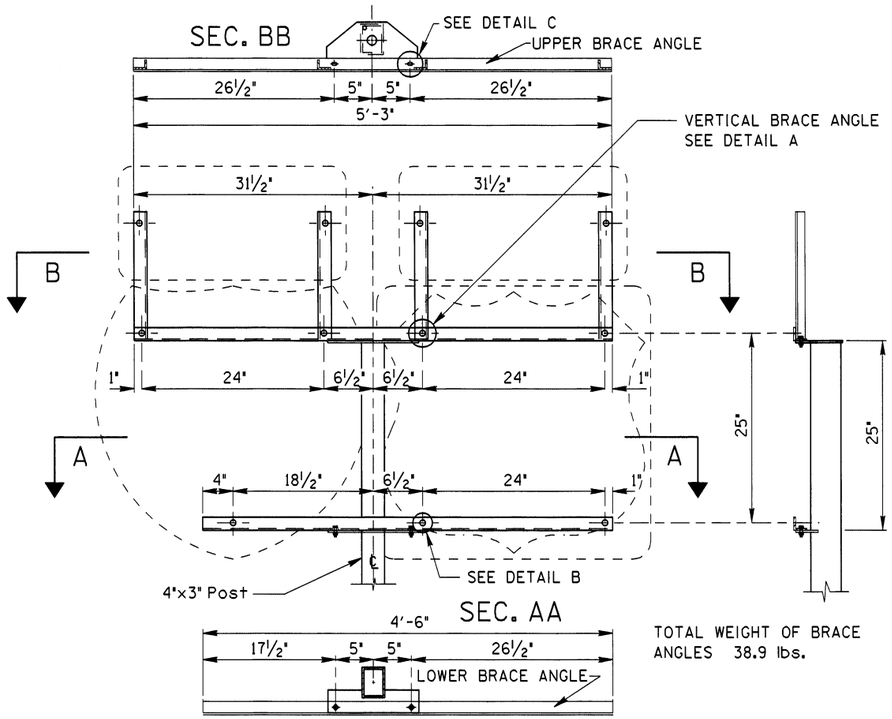

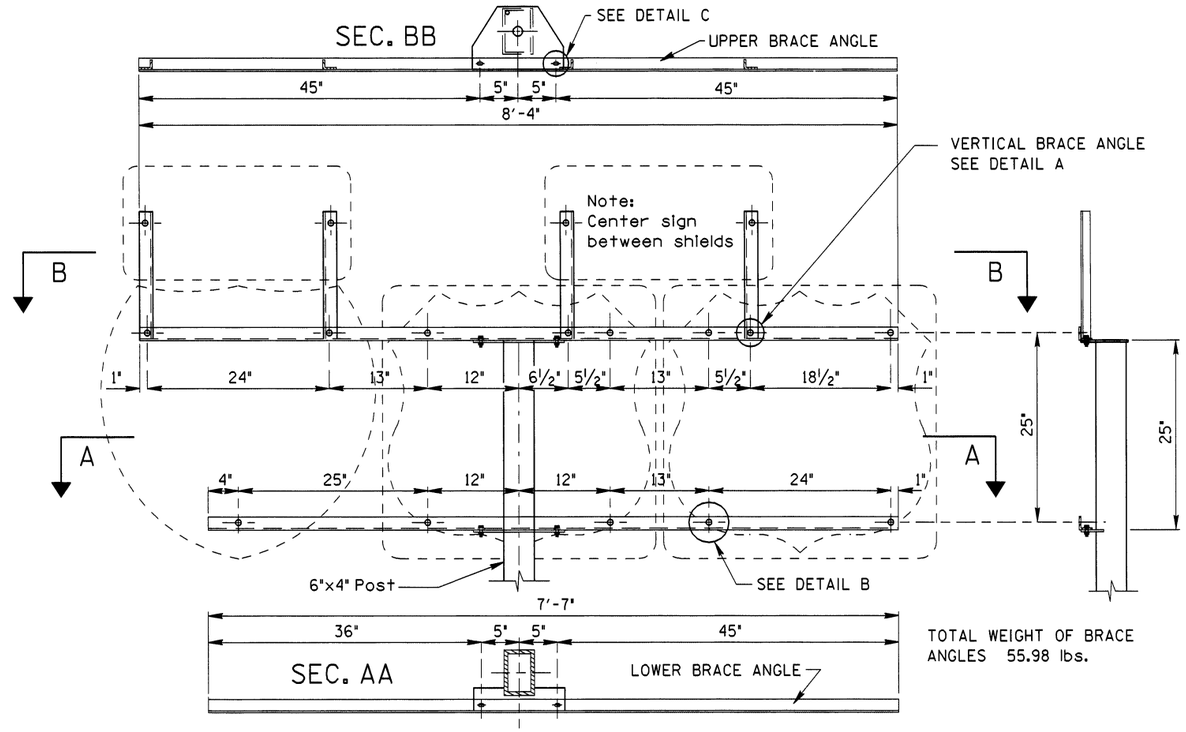

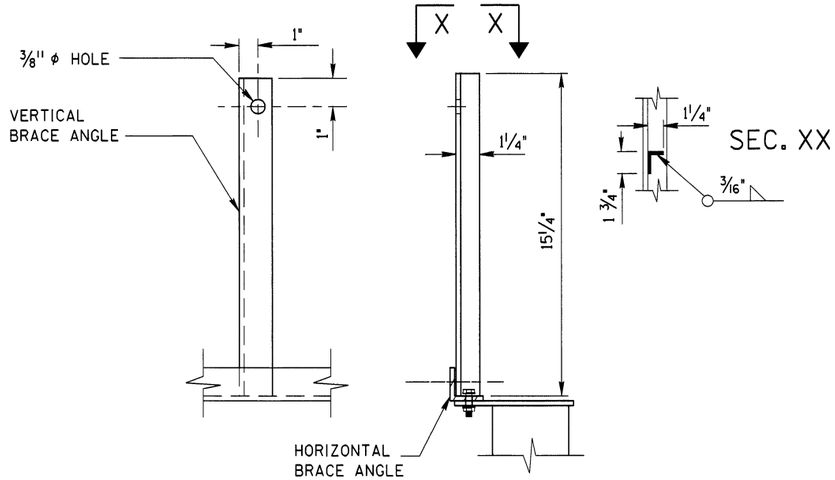

DETAIL A

NOTE:
THESE BRACE ANGLE ASSEMBLIES MAY BE MODIFIED TO ACCOMMODATE ADDITIONAL CARDINAL ROUTE MARKERS ABOVE EACH ROUTE SHIELD AS SHOWN ON THE PLANS. CONFIRMING ROUTE MARKERS DO NOT REQUIRE THE VERTICAL BRACE ANGLES.

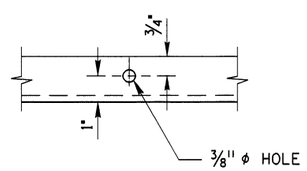

DETAIL B

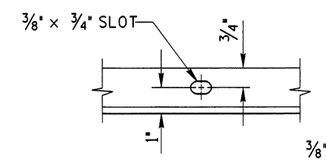

DETAIL C

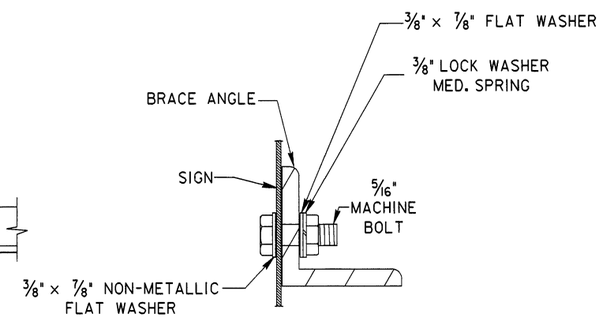

TYPICAL SIGN ATTACHMENT DETAIL

NOTES:

1. WEIGHTS OF BRACE ANGLES DO NOT INCLUDE GALVANIZING.
2. ALL BRACE ANGLES SHALL BE 1¾"x1¾"x¼" AT 2.77 LBS./FT WITH THE EXCEPTION OF THE VERTICAL BRACE ANGLE WHICH SHALL BE 1¾"x1¼"x¼" AT 2.34 LBS./FT.

REVISIONS								
NO.	DATE	BY	NO.	DATE	BY	NO.	DATE	BY
1	12-01	NQB						
2	07-03	NQB						

SCALES SHOWN ARE FOR 11" X 17" PRINTS ONLY

CADD FILE NAME: 19b_0703.std

DRAWING ORIG. DATE: AUGUST, 1992

IDAHO TRANSPORTATION DEPARTMENT

BOISE IDAHO

ASSISTANT CHIEF ENGINEER (DEVELOPMENT)

CHIEF ENGINEER

STANDARD DRAWING

CARDINAL ROUTE MARKER ASSEMBLIES

REQUIRES STD. DWG. I-8-D-2 & STD. DWG. I-8-D-3

English

STANDARD DRAWING NO.

I-9-B

SHEET 1 OF 1

PROFESSIONAL ENGINEER
REGISTERED
7910
7-1-03
STATE OF IDAHO
LANCE Z. JOHNSON