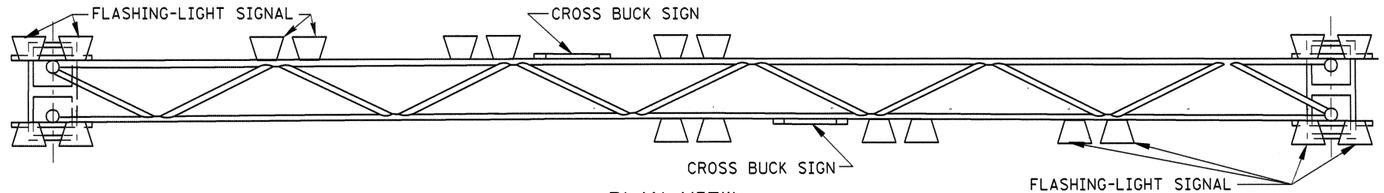

PLAN VIEW

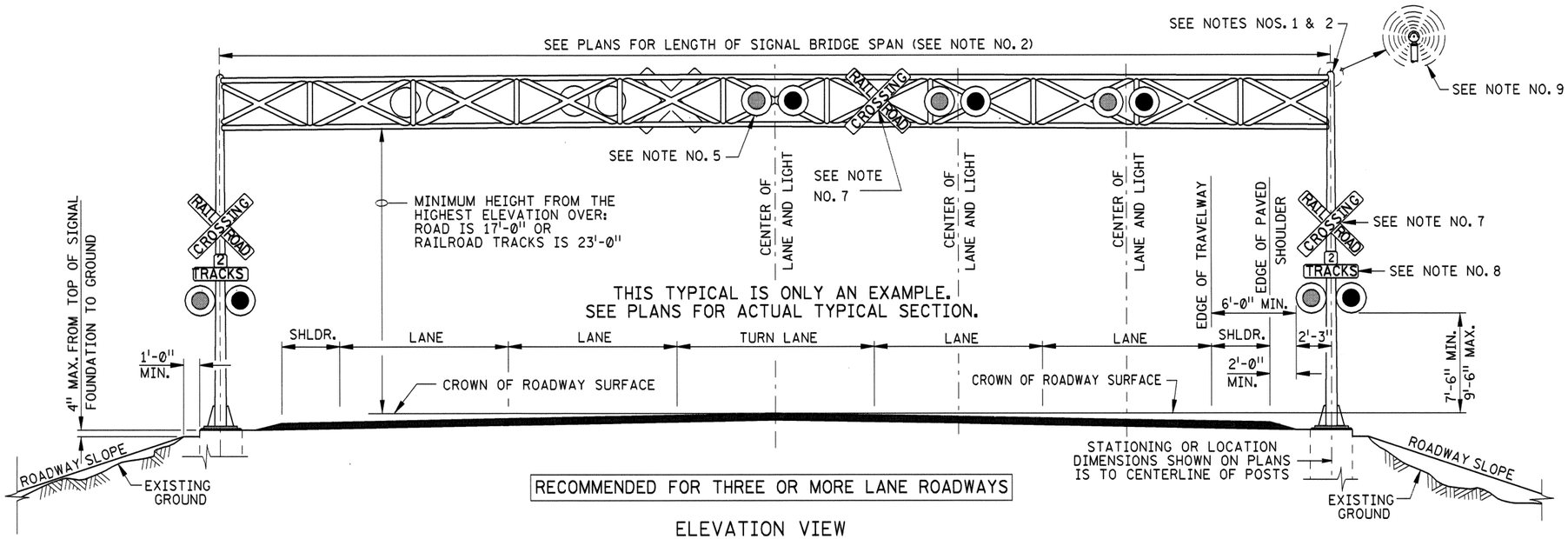

ELEVATION VIEW

NOTES

1. LAYOUT OF HIGHWAY-RAILROAD GRADE CROSSING SIGNAL SHALL BE CONSISTENT WITH THE STANDARDS OF THE RAILROAD COMPANY AND PART 8 OF THE MANUAL ON UNIFORM TRAFFIC CONTROL DEVICES (AS ADOPTED BY THE STATE). ADEQUATE VERTICAL CLEARANCE SHALL BE PROVIDED BY RAILROAD CROSSING SIGNAL OVER THE ROAD AND/OR RAILROAD TRACK(S). THE RAILROAD COMPANY WILL DESIGN THE STRUCTURE AND OTHER COMPONENTS OF THE RAILROAD CROSSING SIGNAL.
2. POST LOCATION AND LENGTH OF SIGNAL BRIDGE SPAN SHALL BE AS SHOWN ON THE PLANS. SIGNAL BRIDGE SPAN IS PERPENDICULAR TO ROADWAY UNLESS OTHERWISE NOTED, ON THE PLANS. ALL PARTS OF THE RAILROAD CROSSING SIGNAL SHALL BE A MINIMUM OF 10 FEET, MEASURED PERPENDICULAR FROM THE NEAREST RAIL OF THE RAILROAD TRACKS.
3. TOP OF THE SIGNAL FOUNDATION SHALL BE FLUSH WITH TOP OF CURB OR TOP OF SIDEWALK. THE GROUND SURFACE SHALL BE GRADED TO WITHIN 4 INCHES BELOW THE TOP OF THE FOUNDATION TO A MINIMUM DISTANCE OF 1 FOOT BEYOND THE SIGNAL FOUNDATION.
4. A FLASHING-LIGHT SIGNAL CONSISTS OF TWO LIGHTS HAVING 12-INCH LENS WITH RED LIGHT EMITTING DIODES (LED) MOUNTED IN A HORIZONTAL LINE THAT FLASH ALTERNATELY WHEN ACTIVATED. THE FLASHING RATE IS 35 TO 65 FLASHES PER MINUTE.
5. NUMBER OF FLASHING-LIGHT SIGNALS SHALL BE AS SHOWN ON THE PLANS. FLASHING-LIGHT SIGNALS SHALL BE MOUNTED BACK TO BACK ON THE OUTSIDE OF THE POST. FLASHING-LIGHT SIGNALS SHALL BE MOUNTED ABOVE THE CENTER OF EACH LANE ON THE SIGNAL BRIDGE SPAN WITH THE FURTHERMOST INSIDE LANE BEING MOUNTED BACK TO BACK ON THE OUTSIDE OF THE SIGNAL BRIDGE SPAN. OTHER FLASHING-LIGHT SIGNALS, IF NECESSARY, SHALL BE PLACED FOR THE BEST VISIBILITY TO OTHER APPROACHING ROADWAY OR PEDESTRIAN TRAFFIC.
6. AAR/DOT IDENTIFICATION TAG SHALL BE ATTACHED TO POST IMMEDIATELY BELOW THE FLASHING-LIGHT SIGNAL OR ON THE OUTSIDE OF THE SIGNAL HOUSE.
7. CROSS BUCK (R15-1) SIGNS SHALL BE MOUNTED BACK TO BACK ON THE OUTSIDE OF THE POST. A MINIMUM OF ONE CROSS BUCK SIGN SHALL BE MOUNTED BETWEEN THE FLASHING-LIGHT SIGNALS ON THE SIGNAL BRIDGE SPAN FOR EACH DIRECTION OF VEHICULAR TRAVEL.
8. SUPPLEMENTAL NUMBER OF TRACKS (R15-2) SIGNS SHALL BE MOUNTED BACK TO BACK ON THE OUTSIDE OF THE POST AT A POSITION BETWEEN THE CROSS BUCK SIGNS AND THE FLASHING-LIGHT SIGNAL WHEN THERE ARE TWO OR MORE RAILROAD TRACKS.
9. BELLS OR OTHER AUDIBLE WARNING DEVICES MAY BE INCLUDED WHICH WILL OPERATE IN CONJUNCTION WITH THE FLASHING-LIGHT SIGNALS.
10. NOT TO SCALE.

REVISIONS								
NO.	DATE	BY	NO.	DATE	BY	NO.	DATE	BY

SCALES SHOWN ARE FOR 11" X 17" PRINTS ONLY

CADD FILE NAME: r1c_0304.std

DRAWING ORIG. DATE: MARCH, 2004

IDAHO TRANSPORTATION DEPARTMENT

BOISE IDAHO

Steven C. Hutchinson
ASSISTANT CHIEF ENGINEER (DEVELOPMENT)

CHIEF ENGINEER

STANDARD DRAWING

HIGHWAY - RAILROAD GRADE CROSSING SIGNAL TYPE 3

REQUIRES SHEET 2 OF 2

English

STANDARD DRAWING NO.

R-1-C

SHEET 1 OF 2

PROFESSIONAL ENGINEER REGISTERED 9415 3/29/04 STATE OF IDAHO JONATHAN LENHART

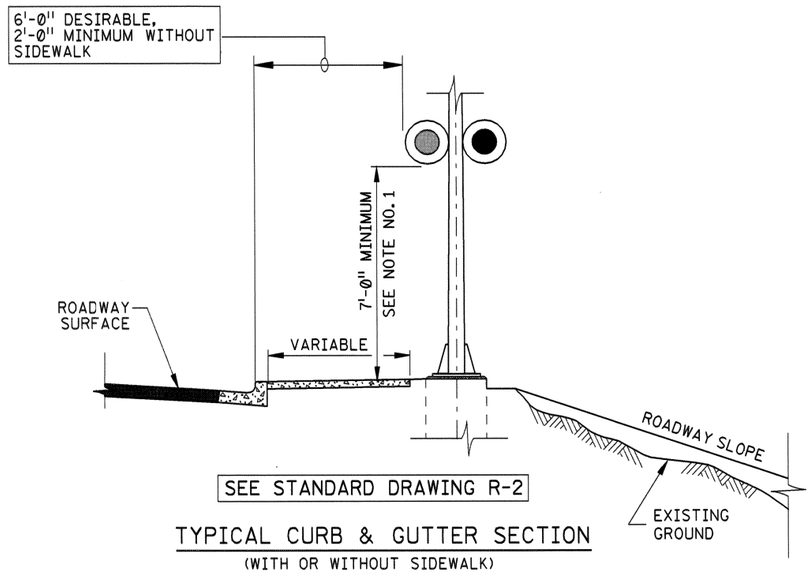

SEE STANDARD DRAWING R-2

TYPICAL CURB & GUTTER SECTION

(WITH OR WITHOUT SIDEWALK)

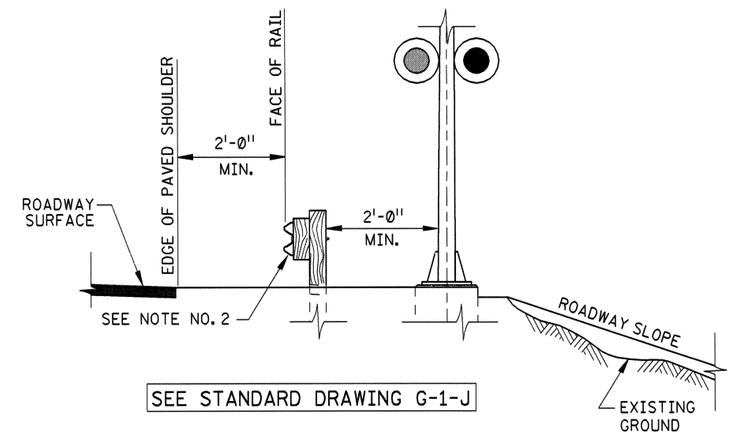

SEE STANDARD DRAWING G-1-J

TYPICAL SECTION

(WITH GUARDRAIL)

NOTES

1. WHERE THERE IS SIDEWALK, THE FLASHING-LIGHT SIGNALS ON THE POST SHALL BE A MINIMUM OF 7 FEET ABOVE THE TOP OF SIDEWALK.
2. THE NEED FOR GUARDRAIL SHALL NOT BE BASED SOLELY UPON THE ROADSIDE OBSTACLE OF A RAILROAD CROSSING SIGNAL UNLESS REQUESTED BY THE RAILROAD COMPANY.
3. NOT TO SCALE.

REVISIONS								
NO.	DATE	BY	NO.	DATE	BY	NO.	DATE	BY

SCALES SHOWN ARE FOR 11" X 17" PRINTS ONLY

CADD FILE NAME: r1c_0304.std

DRAWING ORIG. DATE: MARCH, 2004

IDAHO TRANSPORTATION DEPARTMENT

BOISE IDAHO

ASSISTANT CHIEF ENGINEER (DEVELOPMENT)

CHIEF ENGINEER

STANDARD DRAWING

HIGHWAY - RAILROAD GRADE CROSSING SIGNAL TYPE 3

REQUIRES SHEET 1 OF 2

English

STANDARD DRAWING NO.

R-1-C

SHEET 2 OF 2

PROFESSIONAL ENGINEER REGISTERED 9415 3/29/04 STATE OF IDAHO JONATHAN LENHART