105.00 CONTROL OF WORK

In accordance with Administrative Policy A-06-02 and Division of Highways Memorandum No. 13: *e-mail messages that are sent or received should be considered the same as an ITD-500, and should be printed and stored with official files. Copies should be routed to the District Engineer, Section Manager and other appropriate personnel.* It is important that e-mail messages are written in a professional manner.

All e-mail communications pertinent to the construction project shall be routed appropriately and placed in the official project file. Both senders and recipients of e-mail communications have a responsibility for recognizing pertinent e-mail correspondence for routing and placement in the official file. Pertinent communications include, but are not limited to, matters pertaining to:

1. The construction contract including special provisions, the standard specifications, QC/QA special provisions, federal aid special provisions, the drawings and the bid proposal.
2. Governmental regulations pertaining to the contract including environmental permitting.
3. Claims or potential claims.
4. Disagreements internal to the department as well as between the department and other parties or government agencies that impact the contract or have the potential to escalate to a significant or sensitive issue.
5. Change orders or potential change orders.
6. Expenditure of department funds.

105.01 AUTHORITY OF THE ENGINEER AND SUSPENSION OF WORK

The Resident/Regional Engineer may suspend the Contractor's operation as deemed appropriate. The suspension must be in writing. If such suspension or delay is for an unreasonable time and the Contractor's costs are increased by such unreasonable delay, a change order shall be prepared to pay for the increased costs in accordance with section 109.03 (4c), Standby Rate (excluding overhead and profit). Accurate force account records should be kept as supporting documentation. The Contractor is obliged to send written notice to the State when the Contractor considers a delay or interruption unreasonable. The notice must be received within seven (7) calendar days of the receipt of notice to resume work.

Written notice for the Contractor to resume work is required. If the contract is on a working day basis, the resumption to work notice should allow the Contractor a reasonable period to remobilize prior to contract time resumption.

105.02 PLANS AND WORKING DRAWINGS

The Contractor must have a copy of the contract and a complete set of plans at the project site at all times. This requirement should be made clear at the preconstruction conference.

Working Drawings (Shop Drawings)

At the preconstruction conference, Contractors should be advised of the following procedures for processing shop drawings for elements of structures (including, but not necessarily limited

to, bridges, culverts, retaining walls, sign and/or signal supports, and buildings) when shop drawings are required by specifications or submitted for other reasons.

A. If the shop drawings are for a bridge structure, a minimum of six (6) sets of prints of shop drawings shall be submitted by the prime Contractor directly to the Bridge Engineer. If there is a known need for distribution of prints other than described hereinafter, additional sets shall be submitted as required. A letter of transmittal (or other transmittal document) is to accompany the shop drawings. The prime Contractor shall send a copy of the transmittal letter to the Resident/Regional Engineer.

B. When the Bridge Engineer has reviewed the shop drawings, one set (signed and stamped to indicate the type of approval) will be returned directly to the prime Contractor. Copies of the transmittal letter, without enclosure, will be sent to the Resident/Regional Engineer.

C. When shop drawings are returned for corrections, one set (stamped and signed by the Bridge Engineer) will be sent directly to the prime Contractor. Copies of the transmittal letter, without enclosure, will be sent to the Resident/Regional Engineer.

D. Shop drawings may be of any convenient size when submitted for approval; however, prior to final payment, the Contractor is required to submit 22" x 34" (559 mm x 914 mm) mylars of shop drawings as approved for structural metals, prestressed concrete, or other items as may be requested by the Bridge section. These are to be in ink or usable reproductions of pencil drawings. The prime Contractor should submit the mylar drawings directly to the Bridge Engineer with copies of the transmittal letter to the Resident/Regional Engineer. Final submittals of shop drawings for signs and/or signals shall be transmitted to the Traffic Engineer as indicated in section 616.

E. The Resident/Regional Engineer shall check with the Bridge and/or Traffic section to determine if the required submittals have been received prior to payment of the final estimate.

Whenever a change is indicated or requested in structural design specifications, quality control, or any other change that may require a change order during the exchange of working drawing information between a headquarters' section and the supplier or fabricator, the following must be kept in mind:

- Approval of construction changes of any nature must be made in accordance with section 104.03 of this manual.
- All discussion and correspondence relative to negotiating change orders must be between the Resident/Regional Engineer and the Contractor.
- Whenever FHWA approval for any change is required, the Construction section shall obtain FHWA approval.
- In no case shall a headquarters' section make a commitment to the Contractor regarding any phase of the project, either orally or in writing. Sections may advise the District personnel, but all communication that involves commitments or instructions will be between the District and the Contractor.
- Consultants shall not communicate directly with the Contractor, subcontractor, or supplier. All consultant communication must go through the Resident/Regional Engineer.

During the fabrication phase, control will rest with personnel charged with inspection. Fabrication will normally be inspected by department personnel at local plants within the State or in other states where possible. The Materials Engineer using the services of a commercial inspection agency or inspectors from that state's highway department will handle fabrication at out-of-state plants. Control of the inspection in this case will rest with the Materials Engineer.

Consultant Work for Working Drawings and Falsework Plans

The consultants should check and approve working drawings and falsework plans on those projects or portions of projects that they have designed. The District Engineer, or the District-appointed consultant agreement administrator, and the local sponsor (if one is involved) will be responsible for negotiating a supplemental engineering agreement with the consultant for this phase of construction engineering. The Consultant Agreement Unit in Roadway Design will process the supplemental engineering agreement. The consultant cannot be requested to do this work without a supplemental agreement.

Prior to authorizing the consultant to proceed with any work, an ITD-205, Authority for Project Expenditures, must be issued indicating the estimated increase in construction engineering (CE) to cover the estimated cost of engineering by agreement. Consultant work done on construction projects prior to issuance of an authorized ITD-205 (indicating federal-aid authorization) will not be eligible for federal-aid participation.

Once authorized, the Resident/Regional Engineer will transmit plans, working drawings, and falsework plans from the prime Contractor to the Consultant and from the Consultant back to the prime Contractor.

105.03 CONFORMITY WITH PLANS AND SPECIFICATIONS

Material or work that does not meet specifications, but is reasonably acceptable, may be accepted with an adjustment in price based on engineering judgment. Material and work accepted under this condition shall be done so by change order.

Nonspecification asphalt may be accepted by informing the Contractor by letter of the price adjustment. The Materials section will determine the amount of penalty based on a uniformly administered standard. The test results recommended amount of penalty and the recommended letter to the Contractor should be transmitted from the headquarters Materials Engineer to the Resident/Regional Engineer in the form of a memo. The Resident/Regional Engineer shall inform the Contractor in writing and deduct the penalty amount from the next progress pay estimate.

When the specifications contain price adjustment provisions (e.g., section 502, QC/QA Special Provisions, etc.), then those provisions should be followed in lieu of the above-mentioned procedure.

105.04 COORDINATION OF CONTRACT DOCUMENTS

The plans, specifications, supplemental specifications, and special provisions are the contract documents. These contract documents should all work together and read as a whole. The Standard Specifications, Section 105.04, gives guidance with respect to conflicts between the contract documents. The Contractor has a duty to immediately notify the Resident/Regional Engineer when a conflict, error, or omission is discovered so the Resident/Regional Engineer has the opportunity to make corrections and interpretations as necessary to correct the error or omission.

105.07 UTILITY FACILITIES (INCLUDING RAILROADS)

The Engineer must be familiar with the work to be done by the various utility companies and the time limits, including material delivery, needed to do the work.

Notice to Proceed with Work

On all projects, utility adjustment work can not be performed until written authority to proceed is issued by the Idaho Transportation Board. Any necessary utility/railroad agreements will be issued by the Utilities Engineer. Verify that copies of the utility/railroad agreements for work at State expense are in the Engineer's office and examine prior to the utility company starting work to verify what inspection requirements are needed.

Prior to performance of any work by utilities or railroads that involves or is intended to involve federal-aid participation; the Engineer should assure that the most current ITD-2101 authorizes such work. If authorization is not obtained prior to work performance, the FHWA may disallow participation.

Preparation

Performance of the Contractor's work can be delayed because utilities/railroads fail to remove, relocate or alter their facilities when needed. Every effort should be made to invite the utility/railroad company to the preconstruction conference so their schedule for doing the work can be discussed and incorporated into the Contractor's CPM schedule.

The Resident/Regional Engineer takes the following actions:

1. During project advertisement, contact the utility/railroad representative listed in the proposal to ensure that they are aware that the project will soon be let.
    a. Verify that they have a copy of the plans and specifications and that their facilities are correctly shown to the best of their knowledge.
    b. Inquire into how much prior notification they will need from the contractor for their part of the work (for ordering materials and scheduling), and how much time they will need to complete the work.
    c. Discuss work requirements.
    d. Discuss the billing procedures as shown in the agreement.
    e. Discuss where and when recovered materials can be inspected.
    f. Utility/railroad Company to notify Department of completion of work.

g. Emphasize during any discussions with the utility/railroad that any proposed modifications of the project from the plans and agreement shall be bilaterally approved in advance by change order. Deviation from the plans and agreement without such prior approval will remove that portion of the work from any financial obligation by the State of Idaho or the Federal Highway Administration.

After notice of award to the successful bidder, share the information with the contractor that you obtained from the utility during project advertisement. The reason for this notice is so the contractor can include in the CPM schedule.

2. Invite all utilities/railroad to the preconstruction conference and include utility/railroad work as a topic. It is recommended that this discussion occur early in the conference so that the utilities/railroads can leave if they wish.

   a. Discuss the items outlined above.

   b. Emphasize that it is the contractor's responsibility to coordinate the work and includes:

      i. **timely** prior notification of when utilities need to perform their work and

      ii. Providing utilities **sufficient** time in the schedule to do the work.

   c. Stress to the Contractor that if delays occur because of contractor failure to properly communicate and coordinate with the utilities (e.g. untimely notification, not enough time given to utilities to accomplish their work), it will be considered avoidable (see Standard Specification Section 105.07).

   d. Adequately document in the meeting minutes the necessary utility notification and work schedule requirements.

   e. Require the contractor to show utility/railroad work as activities on the CPM schedule and verify with the contractor that the utilities/railroad agree with the durations shown. Confirm that the contractor is communicating adequately with the utilities concerning schedule adjustments and updates. Accomplish this by 1) including as a topic during the regular weekly progress meetings and 2) discussing with the utilities as well.

Remember that there is no contractual relationship between the contractor and the utilities/railroad. Doing the above will facilitate communications between the contractor and the utilities/railroad.

Construction

The Engineer should stay in close contact with the utility/railroad company regarding any changes in operations such as delays to equipment or forces, or changes in schedule.

The Resident/Regional Engineer must:

1. Oversee inspection of utility/railroad for compliance to plans and all agreement requirements. One individual should be assigned the responsibility for inspection and completion of "utility and railroad records." That person:
   a. Inspects the work in sufficient detail to ensure that the exact work contemplated by the agreement is accomplished.
   b. Determines that no unauthorized work is charged to the State.

   c. Determines that credit is received for all salvage material.

   d. Maintains proper records. (The individual assigned shall keep an adequate diary (ITD-25 Standard Construction Diary**)** to support the work. The diary entries for ***actual cost***

agreements should be complete enough to cover the company's personnel and equipment, date work started and stopped, verification of work done, activity, and for posting to the utility ledger. Reference marks can be used in the reporting portion of the diary so office staff is alerted to record pertinent information in the ledger. Diaries maintained for ***fixed-cost lump sum agreements*** will not require as much detail as actual cost agreements. The records should support work accomplished and necessary information to be posted in the utility ledger and assure that proposed work in the agreement was completed. Copies of daily work orders or other reports can be obtained from the company to further support the work.)

e. Inspect recovered materials prior to disposal per Utility/Railroad Agreement. The method used for inspecting recovered materials should be arranged with the company supervisor. Most utility companies have a limited stockpile area for recovered materials; therefore, they usually salvage or dispose of materials on a daily basis. Reviewing daily retirement reports for disposition of recovered material can satisfy inspection requirements. Normally, the company will dispose of any material classified as junk. Make sure the material is not reused on the project. Also, the Department should review the material for possible use.

2. Complete and Oversee Utility Change Orders
   a. If there are changes from the plans or agreement for the utility/railroad work to be done at State Expense, a utility change order (ITD-403must be approved and executed prior to work being done. When the utility or railroad company desires to have work contracted by the highway contractor or his subcontractor at unit bid prices of the construction contract, then a utility change order (ITD-403) shall be initiated removing the work from the utility as well as an ITD-400 authorizing the contractor to perform the work.
   b. Concurrence from the Utilities/Railroad Engineer is required for the ITD-2317, and the ITD-403 must be signed by an authorized utility representative. Send a copy of the executed change order to the Utility Engineer.
   c. Reflect these changes on as-built drawings at the conclusion of construction.
   d. Request funds to be obligated for any additional cost for utility/railroad work by ITD-2101.

3. Review and pay billings from the utility/railroad companies
   a. Utility/railroad company submits billing(s) to Resident/Regional Engineer for reimbursement of facility relocation costs in accordance with a Utility/Railroad Agreement. Supporting cost documentation is to be provided for Actual Cost Agreements. If there are changes in the scope of work, extra work, or major changes in the planned work covered by the approved agreement, plans, and estimates, reimbursement will be limited to costs covered by a modification of the agreement in the form of a prior-approved utility change order**.**
   b. Billing(s) and any supporting cost documentation are reviewed by the Resident/Regional Engineer for obvious errors or discrepancies with the understanding that ITD personnel are not necessarily experts in utility/railroad work.
   c. Questions regarding billings are to be directed to the billing company. Any billing disputes or adjustments are to be resolved with the company prior to the final payment.
   d. Established rates for overhead, equipments, and other items may be obtained from Internal Review. An audit, by Internal Review, of either the billings or billing procedures of a utility company can be requested at anytime by the District.

e. Payments are made by the District in accordance with the railroad or utility agreement and *Section 8.5* of the *Financial Services Manual.* The District prepares an Invoice and Tracking form that in turn will generate a warrant from the State Controller's office. Generally a retainage amount of 5% is withheld from each progress payment.

f. Payments are to be made within 60 days in accordance with Subsection 67-2302 of Idaho Code or as specified by the agreement. Otherwise the billing utility or railroad company may assess a late fee and/or interest charge.

g. Payments are reviewed by the District Records Inspector in accordance with *Section V* of the *District Record Inspector Manual*.

Post Construction

A utility permit shall cover each utility (excluding railroads) which crosses or occupies the right of way of a project. The requirement for utility permit applies to all utility installations, regardless of whether covered by a utility agreement or not. A permit is required for existing facilities relocated at company expense, even though the proposed new locations are shown on the construction plans. Existing facilities not relocated and remaining within the highway right-of-way after construction are also to be included unless those facilities are covered by existing utility permits.

The preparation of a permit is the responsibility of the Resident/Regional Engineer. The permit shall be finalized after all the utility work is complete and prior to receiving the final billing from the company so that the exact final location of the utility is known and in accordance with Administrative Policy A-12-01, Right of Way Use Permits and the policy for the accommodation of utilities. This permit must be sent to the District for record keeping.

Any claim by a utility or railroad company for additional money shall be reviewed in regard to any agreement with the company. Some agreements, like railroad agreements, require that ITD reimburse the company for all additional costs or losses. Generally a claim is evaluated by the District for payment, the same as the procedure used for contractor's claims including any appeals. A claim may be paid by insurance company or bonding company associated with the project or by ITD.

The District is responsible for obtaining funding for any payment of claims. Payment of claims is made in accordance with *Section 8.5* of the *Financial Services Manual.* No retainage amount is withheld from a claim payment.

Final payments and any retainage withheld from previous payments are paid in full in accordance with *Sections 8.3.4 and 8.5* of the *Financial Services Manual* and *Section V* of the *District Record Inspector Manual*. An ITD-1865 Utility/Railroad Fiscal Final Review Report, is prepared by the Resident/Regional Engineer and submitted to the District Records Inspector with the final billing. These forms shall be sent to the Financial Services Controller and a copy to the Utilities Engineer. Instructions for completing the form are shown on the reverse side of the form. An audit by Internal Review of either the billings or billing procedures of the railroad or utility company can be requested through the ITD-1865. Generally audits are not conducted on agreement amounts less that $200,000 or for agreements where the actual cost exceeds the estimated amount by less than 15% or $50,000.

Local Forces and Railroad Projects by Agreement

The Roadway Design section will generate the Plans, Estimate, and the ITD-2101. The Construction Section will prepare the Detailed Estimate. Three copies of the Detailed Estimate shall be submitted to Financial Services so the project can be placed under agreement with the Federal Highway Administration. The District will be sent a) Supply of Plans, b) Detailed Estimates, and c) the authorized ITD-2101 with an attached Authorization to Proceed letter from Roadway Design.

105.08 CONSTRUCTION STAKES, LINES, AND GRADES

Unless contract surveying is provided for in the contract, the Resident/Regional Engineer will normally provide periodic bench marks, centerline, or control line stakes as dictated by the plans, right of way breakpoints, slope stakes with RPs, and blue tops for the various courses of materials for road work. Except for right of way stakes and benchmarks, these are generally placed at fifty (50) foot intervals. Other lines and grades needed by the Contractor to perform the work such as offset points, string lines for surface courses, location of dowel baskets, tie bars, saw lines, stripe spotting, etc., are the responsibility of the Contractor. The Resident/Regional Engineer will provide the Contractor with copies of necessary notes or drawings to accomplish the work.

Roadway centerline and a benchmark will be provided for bridges and an accessible control line and bench will be set for other major structures such as retaining walls. Structure centerline and benchmarks will be set for minor structures and culverts. Supplementary lines and grades are the responsibility of the Contractor.

The Resident/Regional Engineer will spot check survey work performance by the Contractor, but the cost of correcting surveying errors committed by the Contractor is solely borne by the Contractor.

Monuments

Public land corners, street monuments, and right of way monuments shall be set from references provided by a Professional Land Surveyor.

Prior to final acceptance of those projects wherein this work is included in contract surveying, all street monuments, right of way monuments, and public land corners shall be certified by a Professional Land Surveyor in accordance with Title 55, Chapter 16 of Idaho Code for perpetuation and filing. For all other projects, this responsibility rests with the department. Final inspection reports will address the status of this work.

105.09 AUTHORITY AND DUTIES OF RESIDENT ENGINEER

Title 23 CFR 635.105 entrusts the Department with the responsibility for construction of all Federal-aid projects and is not relieved of this responsibility when authorizing performance of the work by a local public agency or other Federal agency or when employing a consultant to provided construction engineering and inspection (CE&I) services. The regulation requires the Department to provide a full-time Engineer employed by the Department to be in responsible charge of these types of projects.

In addition to the duties listed in the Standard Specifications, the Engineer in immediate and responsible charge of projects must be:

- Aware of the day-to-day operations on the project;
- Aware of and involved in decisions including those for changes and extra work, supplemental agreement requirements for consultants.
- Aware of inspector qualifications, assignments and job performance; and
- Visit the project on a frequency that is commensurate with the magnitude and complexity of the project.

105.11 INSPECTION OF WORK

All materials incorporated in a project and the details of the work are subject to inspection by the Resident/Regional Engineer. The Contractor is to provide the necessary access and information so the Resident/Regional Engineer can inspect the work and materials.

The Resident/Regional Engineer has the right to direct the Contractor to remove or uncover a portion of the work already finished. This is to be done if the Resident/Regional Engineer suspects that either nonspecification material or methods have been used. Continuous inspection to check for compliance with specifications is far better than to have the Contractor remove work that has already been finished. Keep in mind that if the uncovered work meets specifications, the removal, uncovering, and restoration of the work will be paid for as extra work. If the uncovered work does not meet specifications, then the removal, uncovering, replacement, and restoration of the work will be at the expense of the Contractor.

Utilization of Inspection Personnel

Project inspection and materials testing are very important and necessary activities to guarantee the desired quality of highway construction. The inspection activities, however, also represent a large portion of the cost of construction engineering. Proper utilization of construction work force should be monitored to ensure that an adequate staff is available to control the work and the elimination of unnecessary work should be considered whenever appropriate.

Inspection by Construction Personnel

Personnel from the Construction section will periodically review projects under construction to assist the District, promote uniformity in application of contract requirements, and verify compliance with the contract plans and specifications. Generally, the reviews will be one of three types, Intermediate, Phase, or Final.

Intermediate reviews will be either an overall project review or an isolated activity review. An ITD-1406, Construction Inspection Report, will be completed with the following heading information:

1. ***Project Description*** including equipment being employed by the Contractor and quality of the work being performed.

2. ***Action on Previous Recommendations*** – was action taken on recommendations from previous reports in a timely manner?
3. ***Current Recommendations*** – A list of current recommendations and a statement that the District acknowledges some type of corrective measures will be implemented.
4. ***Work in Progress*** – a narrative of the work in progress on the project at the time of project visitation.
5. ***Traffic Control*** – a brief description of traffic control plan and written narrative addressing the effectiveness of the current traffic control plan used in the work zone.
6. ***Safety*** aspects of the work in progress, including periodic nighttime reviews of traffic control devices, if applicable.
7. ***Project Staffing*** – a brief narrative describing how the project is staffed.
8. ***Project Records*** are inspected in general to make sure they are current and properly filed. The CPM schedule, diaries, environmental, project estimates, and materials summary shall be specifically addressed.
9. ***Status of 2317s, Change Orders, and QVRs*** shall be listed in a table format.
10. ***Comments*** shall be given as to the progression and quality of the project.
11. ***Closeout Conference with the District*** will be held with the Assistant District Engineer to discuss the review.
12. ***Pictures.***

SUGGESTED QUALITY FACTORS FOR CONSTRUCTION REVIEWS

Overall, project reviews should normally include an assessment of the factors contained in Group I of the suggested Quality Factors. Isolated activity reviews would generally address those items contained in Groups I and II for the element being reviewed.

ELEMENT	GROUP I	GROUP II	GROUP III
RIGID PAVEMENT	W/C Ratio Joint Construction Paving Operation Curing	Air Content Thickness Finish/Texture Rebar Place Cover Strength Vibration/Placement Slump Dowel Place/Cover	Surface Smoothness Tolerance Uniformity of Mix Gradation Aggregate Quality Cement Type Use with Fly Ash Total Time Cement Exposed to Moisture Batching/Mixing Use of Admixtures
BITUMINOUS PAVEMENT	Compaction/Density Asphalt Content Joint Construction Paving Operation/Balance Typical Section	Surface Smoothness/Tolerance Thickness Aggregate Quality Stability Void Ratio	Uniformity of Mix Mix Temperature Plant Inspection Use of Fillers Tack Coat
BRIDGE DECK and/or PROTECTIVE SYSTEM CONSTRUCTION	Rebar Place/Cover W/C Ratio Curing Finish/Texture	Mix Temperature Curing Air Content Strength Slump Thickness Vibration/Placement Formwork	Gradation Cement Type Batching/Mixing Inspection Transporting/Discharging Concrete Use of Fly Ash Total Time Cement Exposed to Moisture Aggregate Quality Use of Admixtures
STRUCTURAL CONCRETE	W/C Ratio Curing Rebar Place/Cover Finish	Slump Air Content Vibration/Placement Formwork	Use of Admixtures Cement Type Gradation Use of Fly Ash Total Time Cement Exposed to Moisture Mixing Effort Batching/Mixing Inspection Transporting/Discharging Concrete
BASE COURSE	Compaction/Density Gradation Method of Adding Water	Thickness Moisture Content Aggregate Quality	Surface Smoothness/Tolerance Treatment/Admixtures Placement Inspection
EMBANKMENT	Compaction/Density Moisture Content Lift Thickness Slope Rounding/Shaping	Material Quality Drainage	Placement Inspection Gradation Foundation Preparation Equipment Type Treatment/Admixture Type

Phase reviews (Inspections in Depth) will involve a detailed review of a particular element. In addition to completion of the ITD-1406, Construction Inspection Report, a comprehensive outline will be completed for the element involved. Suggested quality factors for review are shown in the previous table.

A Final review should be held on each project, preferably at the time of the District's final inspection. The ITD-1406 will not necessarily address all items indicated in the Intermediate reviews, but should contain a general statement with respect to any findings and a recommendation concerning acceptance. Attendance is encouraged at prefinal inspections (see Section 105.16) of all but minor projects.

Photographs of project activity should be included whenever possible for reviews and added to the report.

A closeout conference shall be held with the Assistant District Engineer, or a delegate, at the end of all reviews and prior to publishing the report. Results of this discussion, and with whom held, shall be stated at the end of the report. If it is not practical to hold the closeout conference while still in the field, it may be held by telephone or e-mail correspondence after returning to the office.

Inspection by Other Agencies

If any other unit of government, political subdivision, or utility is to pay for a portion of the work being done, they have the right to inspect the work governing their jurisdiction. If they have any suggestions as to work or materials, their comments are to be submitted to the Resident/Regional Engineer, since ITD administers the contract.

Review of Work Prior to Completion of the Project

When construction projects are completed, they are then turned over to maintenance personnel. The maintenance personnel should be provided an opportunity to identify potential problem areas during construction that could minimize maintenance problems. Prior to the prefinal inspection of projects and while the Contractor still has a substantial amount of equipment on the site, the Resident/Regional Engineer should review the work with the maintenance foreman who will maintain the finished project. During this review, the Resident/Regional Engineer should explain any unusual features of the project and ask for maintenance suggestions.

The Resident/Regional Engineer will notify the Bridge Inspection Engineer before the completion of the superstructure on any new bridge construction project that includes any part of the substructure constructed in the water or which will be underwater. This notification will allow for an underwater inspection of structures that might be scour critical, and provide corrective actions before completion of the project. In addition, the Resident/Regional Engineer will review newly constructed bridges with the Bridge Designer and the Maintenance Quality Specialist. During this review, the Resident/Regional Engineer will point out any problem areas noted during construction. The Maintenance Quality Specialist should note any areas that will require follow-up during routine bridge inspections. Diary entries of these reviews should be made showing dates, participant's names, suggestions, and problems discussed.

Environmental Aspects

During construction, the Resident/Regional Engineer will monitor compliance with the project environmental requirements including project environmental mitigation plan report criteria.

(Federal-Aid projects). At completion of the work, the Maintenance Engineer/Superintendent will be given a copy of any environmental documents affecting maintenance of the project.

105.13 LEGAL WEIGHT REGULATIONS

Legal weight regulations must be controlled when the Contractor, subcontractor, and materials suppliers haul materials on public roads beyond the limits of the project. The following page (Legal Allowable Gross Loads) sets forth the legal allowable weights on all public roads. The distance of the vehicle configuration should first be measured from the first axle on the drivers to the last axle of the configuration. Use this distance to calculate the weight of the vehicle and add 12, 000 pounds for the steer axle to approximately calculate the total gross legal weight allowed for that vehicle configuration. When calculating axle spacings to determine legal weight, round up or down to the nearest foot (six inches or more – round up to the next foot). Interior axle spacing must also be measured to determine allowable weights on the axle combinations involved. Interstate routes are limited to 80,000 lb gross weight unless an excess weight permit is obtained.

Vehicle registration should be checked to ensure that trucks are licensed to carry their legal allowable weight. (Some trucks will be registered for weights exceeding legal allowable gross loads or practical axle loadings.) Legal gross weight and axle weights shall not be exceeded and the vehicle must be registered to haul this weight.

In the Legal Allowable Gross Loads table, the following should be noted:

1. Use 49-1001(2) on interstate routes for exempt commodities that do not exceed 79,000 lb.
2. Use 49-1001(9) on noninterstate routes for any vehicle and/or load not exceeding 80,000 lb.
3. Use 49-1001(1) – columns C-J on interstate and non-interstate routes for loads exceeding 80,000 lb. [An excess weight permit is required to exceed 80,000 lb on the interstate.]
4. Use columns C-J, or 49-1001(2), or 49-1001(9); but do not use a combination, as this is not allowable.

Tandem axles are limited to not exceed 37,800 lb in columns 49-1001(2) and (9) and 34,000 lb in 49-1001(1). The maximum weight allowed on a single axle is 20,000 lb. Generally, due to vehicle configuration, the front axle of three-axle trucks will only carry approximately 12,000 lb and two-axle trucks 6,000 lb, although some trucks are designed in such a way that more or less weight is distributed to the front axle.

The listed weight limits are the maximum allowed and may be reduced to prevent damage to public road, bridges, and the project.

In addition to enforcing legal weight regulations on weighing operations, control of the loads hauled in connection with other operations such as earthwork, borrow, and delivered materials (such as asphalt) is also very important. The Resident/Regional Engineer should review all bridges that may be hauled over to determine their condition and if they are H-15 or lesser design. (See page 10 for a list of posted bridges on the State Highway System. Non-posted bridges may also be affected.)

12/95

IDAHO TRANSPORTATION DEPARTMENT
LEGAL ALLOWABLE GROSS LOADS

IDAHO CODE SECTION	49-1001 [2] (1)		IDAHO CODE SECTION	49-1001 [1] (3)							
COLUMN	A	B	COLUMN	C	D	E	F	G	H	I	J
SINGLE AXLE WEIGHT	20,000	20,000	SINGLE AXLE WEIGHT	20,000	20,000	20,000	20,000	20,000	20,000	20,000	20,000 (4)
				MAXIMUM LOAD IN POUNDS CARRIED ON ANY GROUP OF TWO OR MORE CONSECUTIVE AXLES							
DISTANCE IN FEET BETWEEN FIRST AND LAST AXLE OF ANY GROUP OF CONSECUTIVE AXLES	VEHICLES WITH THREE OR FOUR AXLES	VEHICLES WITH FIVE OR MORE AXLES	DISTANCE IN FEET BETWEEN FIRST AND LAST AXLE OF ANY GROUP OF CONSECUTIVE AXLES	EXCESS WEIGHT PERMITS ON INTERSTATE HIGWAYS IF OVER 80,000 LBS							
				2 AXLES	3 AXLES	4 AXLES	5 AXLES	6 AXLES	7 AXLES	8 AXLES	9 AXLES
3 THRU 12	37,800	37,800	4	34,000							
13	56,470	56,470	5	34,000							
14	57,940	57,940	6	34,000							
15	59,400	59,400	7	34,000							
16	60,610	60,610	8	34,000							
17	61,820	61,820	8+	38,000	42,000						
18	63,140	63,140	9	39,000	42,500						
19	64,350	64,350	10	40,000	43,500						
20	65,450	65,450	11		44,000						
21	66,000	66,330	12		45,000	50,000					
22	66,000	67,250	13		45,500	50,500					
23	66,000	67,880	14		46,500	51,500					
24	66,000	68,510	15		47,000	52,000					
25	66,000	69,150	16		48,000	52,500	58,000				
26	66,000	69,770	17		48,500	53,500	58,500				
27	66,000	70,400	18		49,500	54,000	59,000				
28	66,000	70,950	19		50,000	54,500	60,000				
29	66,000	71,500	20		51,000	55,500	60,500	66,000			
30	66,000	72,050	21		51,500	56,000	61,000	66,500			
31		72,600	22		52,500	56,500	61,500	67,000			
32		73,150	23		53,000	57,500	62,500	68,000			
33		73,700	24		54,000	58,000	63,000	68,500	74,000		
34		74,250	25		54,500	58,500	63,500	69,000	74,500		
35		74,800	26		55,500	59,500	64,000	69,500	75,000		
36		75,350	27		56,000	60,000	65,000	70,000	75,500		
37		75,900	28		57,000	60,500	65,500	71,000	76,500	82,000	
38		76,450	29		57,500	61,500	66,000	71,500	77,000	82,500	
39		77,000	30		58,500	62,000	66,500	72,000	77,500	83,000	
40		77,550	31		59,000	62,500	67,500	72,500	78,000	83,500	
41		78,100	32		60,000	63,500	68,000	73,000	78,500	84,500	90,000
42		78,650	33			64,000	68,500	74,000	79,000	85,000	90,500
43+		79,000	34			64,500	69,000	74,500	80,000	85,500	91,000
			35			65,500	70,000	75,000	80,500	86,000	91,500
			36			(68,000	70,500	75,500	81,000	86,500	92,000
			37			(6)– (68,000	71,000	76,000	81,500	87,000	93,000
			38			(68,000	71,500	77,000	82,000	87,500	93,500
			39			(68,000	72,500	77,500	82,500	88,500	94,000
			40			68,500	73,000	78,000	83,500	89,000	94,500
			41			69,500	73,500	78,500	84,000	89,500	95,000
			42			70,000	74,000	79,000	84,500	90,000	95,500
			43			70,500	75,000	80,000	85,000	90,500	96,000
			44			71,500	75,500	80,500	85,500	91,000	96,500
			45			72,000	76,000	81,000	86,000	91,500	97,500
			46			72,500	76,500	81,500	87,000	92,500	98,000
			47			73,500	77,500	82,000	87,500	93,000	98,500
			48			74,000	78,000	83,000	88,000	93,500	99,000
			49			74,500	78,500	83,500	88,500	94,000	99,500
			50			75,500	79,000	84,000	89,000	94,500	100,000
			51			76,000	80,000	84,500	89,500	95,000	100,500
			52			76,500	80,500	85,000	90,500	95,500	101,000
			53			77,500	81,000	86,000	91,000	96,500	102,000
			54			78,000	81,500	86,500	91,500	97,000	102,500
			55			78,500	82,500	87,000	92,000	97,500	103,000
			56			79,500	83,000	87,500	92,500	98,000	103,500
			57			(5)– 80,000	83,500	88,000	93,000	98,500	104,000
			58				84,000	89,000	94,000	99,000	104,500
			59				85,000	89,500	94,500	99,500	105,000
			60				85,500	90,000	95,000	100,500	105,500
			61				86,000	90,500	95,500	101,000	105,500
			62				87,000	91,000	96,000	101,500	105,500
			63				87,500	92,000	96,500	102,000	105,500
			64				88,000	92,500	97,500	102,500	105,500
			65				88,500	93,000	98,000	103,000	105,500
			66				89,500	93,500	98,500	103,500	105,500
			67				90,000	94,000	99,000	104,500	105,500
			68				90,500	95,000	99,500	105,000	105,500
			69				91,000	95,500	100,000	105,500	105,500
			70				92,000	96,000	101,000	105,500	105,500
			71				92,500	96,500	101,500	105,500	105,500
			72				93,000	97,000	102,000	105,500	105,500
			73				93,500	98,000	102,500	105,500	105,500
			74				94,500	98,500	103,000	105,500	105,500
			75				95,000	99,000	103,500	105,500	105,500
			76				95,500	99,500	104,500	105,500	105,500
			77				96,000	100,000	105,000	105,500	105,500
			78				97,000	101,000	105,500	105,500	105,500
			79				97,500	101,500	105,500	105,500	105,500
			80				98,000	102,000	105,500	105,500	105,500
			81				98,500	102,500	105,500	105,500	105,500
			82				99,000	103,000	105,500	105,500	105,500
			83				100,000	104,000	105,500	105,500	105,500
			84					104,500	105,500	105,500	105,500
			85					105,000	105,500	105,500	105,500
			86 OR MORE					105,500	105,500	105,500	105,500

IDAHO CODE SECTION	49-1001 [9] (2)	
COLUMN	K	L
SINGLE AXLE WEIGHT	20,000	20,000
DISTANCE IN FEET BETWEEN FIRST AND LAST AXLE OF ANY GROUP OF CONSECUTIVE AXLES	VEHICLES WITH THREE OR FOUR AXLES	VEHICLES WITH FIVE OR MORE AXLES
3 THRU 12	37,800	37,800
13	56,470	56,470
14	57,940	57,940
15	59,400	59,400
16	60,610	60,610
17	61,820	61,820
18	63,140	63,140
19	64,350	64,350
20	65,450	65,450
21	66,000	66,330
22	66,000	67,250
23	66,000	67,880
24	66,000	68,510
25	66,000	69,150
26	66,000	69,770
27	66,000	70,400
28	66,000	70,950
29	66,000	71,500
30	66,000	72,050
31		72,600
32		73,150
33		73,700
34		74,250
35		74,800
36		75,350
37		75,900
38		76,450
39		77,000
40		77,550
41		78,100
42		78,650
43+		80,000

6 /01

NOTES, EXPLANATIONS, AND RESTRICTIONS

(1) Columns A and B set forth weight limits on the Interstate System routes for special products:

Logs, pulpwood, stull, poles or piling; ores, concentrates, sand & gravel, and aggregates thereof, in bulk; unprocessed agricultural products, including livestock.

(2) Columns K and L are the weight limits, up to 80,000 lbs for all types or classes of commodities on non–interstate system routes.

(3) Columns C through J establish weight limits for loads exceeding 79,000 lbs on Interstate & 80,000 lbs on non–interstate routes.

(4) Federal law limits the Interstate System to 80,000 lbs.

(5) Authority to register for gross loads exceeding 80,000 lbs for Interstate System transportation is provided by annual "excess weight" permits which are subject to the weight limits of columns C through J.

(6) An exception to the formula which computes the weight limits of Columns C through J provides that axle groups consisting of two tandems in an overall spacing of 36 feet may have a total loading of 68,000 lbs; 34,000 lbs per tandem.

(7) The maximum allowable load for any vehicle tire operated on any public highway shall not exceed 600 lbs per inch width of tire. The width of a tire shall be determined by the manufacturer's description marked on the sidewall of the tire. Tires on vehicles manufactured prior to July 1, 1987, may exceed the 600 lbs per inch width of tire limit subject to a maximum of 800 lbs per inch width of tire.

(8) In applying the weight limitations imposed in this section the distance between axles shall be measured to the nearest even foot . When a fraction is exactly one–half (1 /2) foot, the next larger whole number shall be used.

LEGAL SIZE LIMITS:

Width	8 1/2 FEET	
Height	14 FEET	
Length:		
Single Vehicle, overall	45 FEET	
Semi–trailer, tractor excluded	48 FEET	
Semi–trailer, tractor excluded on the National Network	53 FEET ▲	
Overall length, except on Interstate and other designated routes	65 FEET	
Double trailer combination, tractor excluded	61 FEET ✱	
Double trailer combination, tractor excluded on the National Network	68 FEET ▲	
Truck and full trailer, overall	75 FEET	
Overhang of load to the rear	15 FEET	beyond last axle
Overhang of load to the front of any vehicle in combination	4 FEET	
Motor vehicle and one or more trailers	75 FEET	

✱ When double trailer combination exceeds the 61 feet, the overall length is limited to 75 feet.

Combinations of not more than four vehicles exceeding unit or combination lengths specified above may operate on designated routes by special permit, subject to maximum computed off–track.

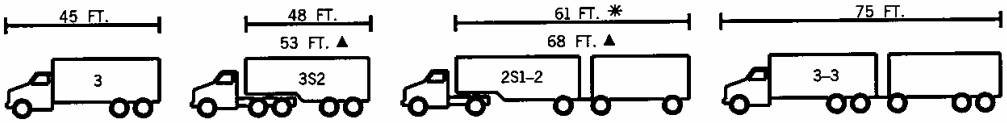

RESTRICTED BRIDGES ON STATE HIGHWAYS 1 /98

Listed below by route and milepost are bridges which have been inspected, analyzed and posted for weight limits. The safe load rating (in tons) for any group of 3, 5 or 6 consecutive axles and the single axle limit are given for each structure listed. These ratings are subject to change without notice due to changes in the capacity of structures.

Vehicles having more than 6 axles may be operated over these bridges provided all of the following conditions are met:
1) The axle spacings and weights do not exceed the LEGAL ALLOWABLE GROSS LOADS table.
2) The following single axle limits are not exceeded.
3) The following safe load ratings for 3, 5 and 6 consecutive axles are not exceeded.

FACILITY CARRIED	MILE POST	FEATURE INTERSECTED	SINGLE AXLE LIMIT (TONS)	SAFE LOAD RATING IN TONS FOR CONSECUTIVE AXLES		
				3	5	6
US 30	196.51	Deep Creek	9.0	26	42	45
SH 97	69.40	UPRR; Coeur d'Alene River	8.5	24	40	45
SH 97	93.92	Beauty Creek	9.0	25	42	45
SH 97	96.22	Wolf Lodge Creek	9.0	26	42	45
SH 162	20.56	Lawyers Canyon Creek	8.0	23	42	40

Operation of combinations of vehicles exceeding legal length limits, but that do not exceed 105 ft permit limit, are allowed on routes designated by the Idaho Transportation Board. See the following for legal length limits.

WIDTH		8 FT 6 IN
HEIGHT		14 FT
LENGTH		
SINGLE MOTOR VEHICLE		45 FT
TRAILER OR SEMITRAILER	OTHER THAN NATIONAL NETWORK	48 FT
TRAILER OR SEMITRAILER	NATIONAL NETWORK	53 FT
MOTOR VEHICLE AND ONE OR MORE TRAILERS EXCEPT AS NOTED		75 FT
DOUBLE TRAILERS	OTHER THAN NATIONAL NETWORK	61 FT OF TRAILERS (OR 75 FT OVERALL)
DOUBLE TRAILERS	NATIONAL NETWORK	68 FT OF TRAILERS
DROMEDARY TRACTOR	STINGER STEERED	75 FT
DROMEDARY TRACTOR	NON STINGER STEERED	65 FT
AUTO OR BOAT TRANSPORTER	STINGER STEERED	75 FT
AUTO OR BOAT TRANSPORTER	NON STINGER STEERED	65 FT
SADDLEMOUNT COMBINATIONS		75 FT
OVERHANG		
FRONT OF ANY VEHICLE		4 FT
FROM CENTER OF LAST AXLE		15 FT
LEFT FENDER OF PASSENGER VEHICLE		0 FT
RIGHT FENDER OF PASSENGER VEHICLE		6 IN

If the Contractor obtains permission from the County Commissioners to haul over-legal loads and/or over-length on county roads, the Resident/Regional Engineer should request a copy of the agreement between the Contractor and the county. This agreement must be received before authorizing the contractor to proceed.

The Resident/Regional Engineer should arrange an inspection of public haul roads prior to starting any haul operations and be accompanied by the Contractor on all routes. Governmental and county representatives should be present when inspecting their routes. Everyone involved should be encouraged to take before and after pictures and document the inspection. It may be appropriate to contact the Construction section to request a photolog of the local road before and after hauling.

To satisfy the requirements of Specifications, Subsection 104.06, Maintenance of Public Roads, a final inspection should be made of the restored haul roads. All concerned parties should be present. The Resident/Regional Engineer should document this inspection and advise the contractor in writing of any deficiencies.

Hauling Over-Legal Loads within Construction Projects

The Contractor is allowed to haul unlimited weights on the subgrade providing no damage is caused to structures, roadway, or other types of construction. However, the Contractor can only haul legal weight on the base and surfacing courses, unless granted written permission by the District Engineer. Before allowing the Contractor to haul over-legal weights, careful consideration should be given to the requirements of the Specifications, subsection 105.13.

Examples of Computing Legal Weights

Following are examples of two different truck-trailer combinations for which legal weights are calculated.

Example #1: The Resident tells the Contractor that legal weights are to be hauled. The Contractor wants to know the allowable legal weight before hauling begins. Hauling will be on primary roads, noninterstate. The Resident checks the Contractor's hauling units and determines the following: 1. Vehicles are registered for 82,000 lb. 2. Axle spacing is as shown below:

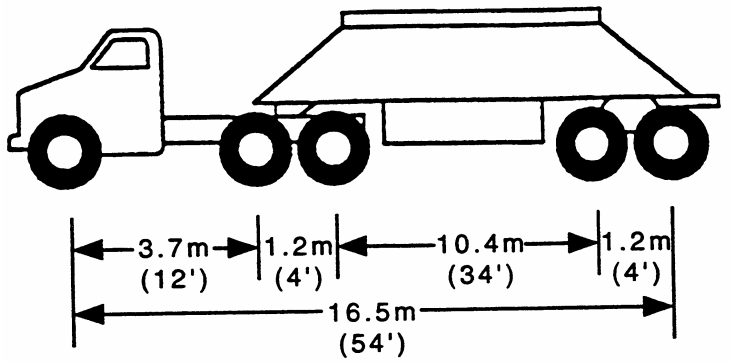

Solution: From the Legal Allowable Gross Weight Chart, Exhibit 105.13-1, 49-1001(1), the maximum weight for an overall axle length of 54 ft is 81,500 lb. In 49-1001(2) and (9), the maximum is 79,000 lb.

Review all listings to see which weight should be used to give the Contractor the maximum advantage of axle weight and total gross weight.

1. 49-1001(2) or (9):

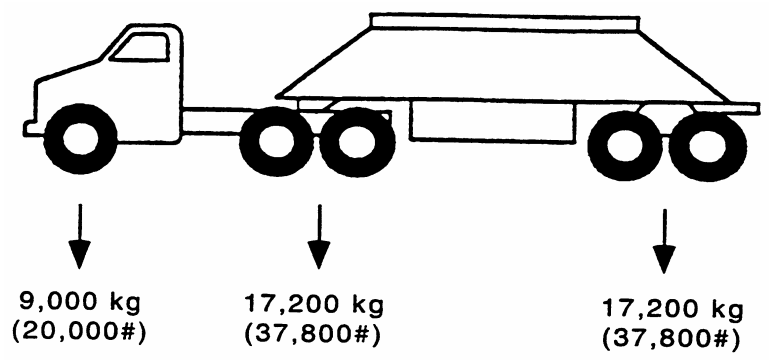

(20,000 + 37,800 + 37,800 = 95,600 lb)

This is not a legal weight and is 16,600 lb over the gross legal weight of 79,000 lb. Therefore, it would be necessary to reduce individual axle and tandem loading to achieve a gross weight of 79,000 lb or less.

Practical load on the front axle is 10,000 lb. So 69,000 lb would need to be distributed over the two tandem axles, not exceeding 37,800 lb on either tandem.

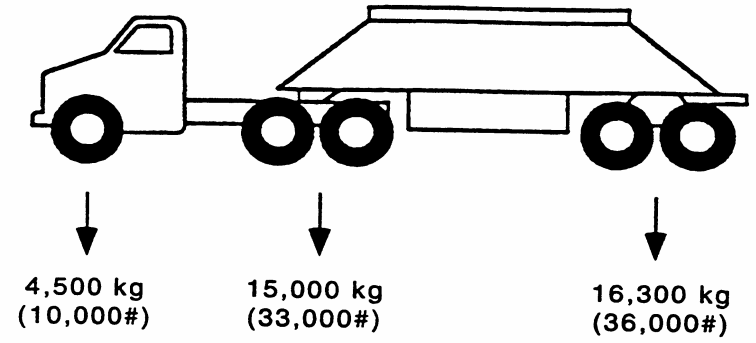

(10,000 + 33,000 + 36,000 = 79,000 lb)

2. 49-1001(1):

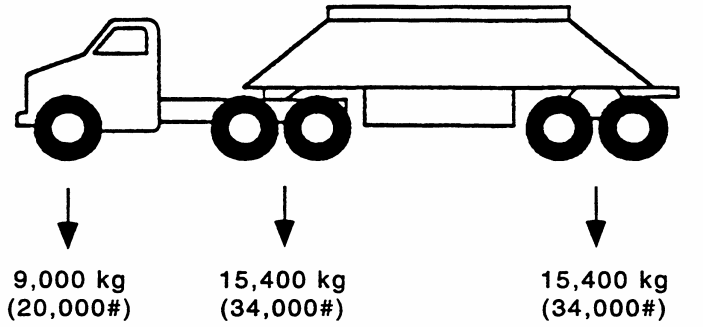

(20,000 + 34,000 + 34,000 = 88,000 lb)

This exceeds the maximum legal weight of 80,000 lb by 8,000 lb. Therefore, the individual and tandem axle loadings will need to be reduced to stay within the 80,000 lb weight allowance. The front axle must be reduced to practical loading of 10,000 lb.

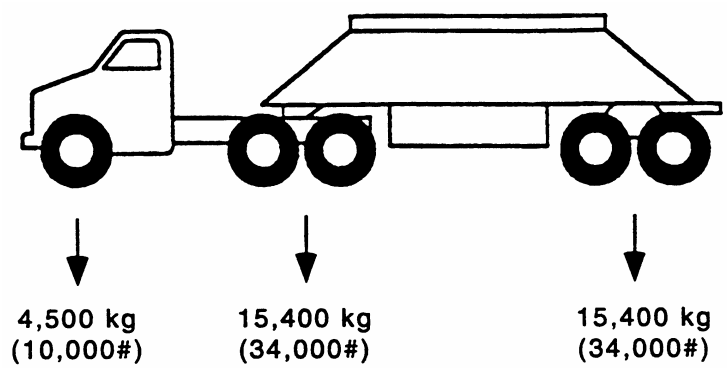

(10,000 + 34,000 + 34,000 = 78,000 lb)

This looks okay and maybe we can add more to the front axle, but when using 49-1001((1) all axle combinations have to be checked.

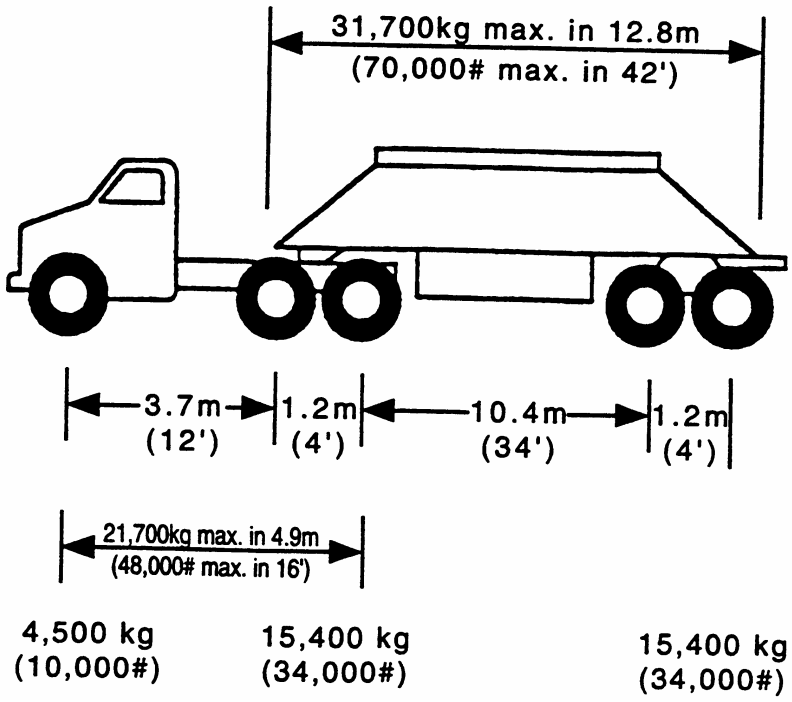

In 16 ft, three axles can only have 48,000 lb. Therefore, the truck is okay. In 42 ft, four axles can have 70,000 lb. Therefore, this is okay. The front axle could carry 3,500 lb additional load and be legal: but you could not exceed 34,000 lb on tandem axles. (The front axle cannot carry more weight if it exceeds 600 lbs. per inch width of the tire.)

In the above example, use of either 49-1001(2) and (9) or 49-1001(1) give about the same results, except that uneven loading is not allowed and a more strict adherence to axle maximums in the second example. No tolerances are allowed. If there are any questions concerning weight distribution to the axles, actual axle weights should be determined of loaded trucks. Not every truck-trailer combination must be weighed, however, a few representative loads should be checked to determine actual axle and tandem weights, as well as the gross weight allowed.

Example #2: Compute the legal gross weights and axle weights for truck, semi-trailer, and pup trailer combination to determine the legal allowable weights. The Contractor's vehicles are registered for 106,000 lb. Loads are to be hauled on primary and interstate highways. Contractor's hauling units are as follows:

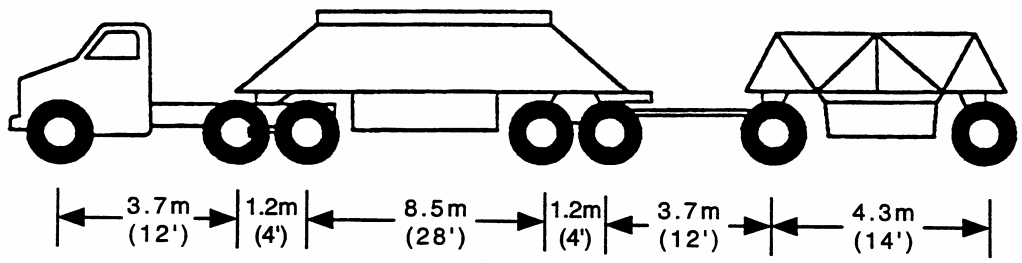

Solution: 49-1001(1) has to be used, since the maximum weight exceeds both the 79,000 lb and 80,000 lb weight limits.

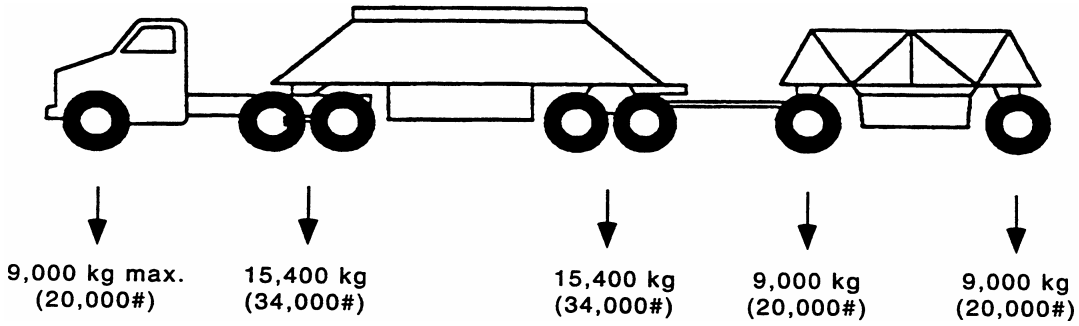

(10,000 + 34,000 + 34,000 + 20,000 + 20,000 = 118,000 lb)

For an overall axle length of 74 ft, the total gross load for 7 axles is 103,000 lb. Obviously, the example above is too heavy a total gross weight, as it exceeds 103,000 lb by 15,000 lb, and it would exceed various combinations of the axles. Using the chart to check axle combinations, the following is obtained:

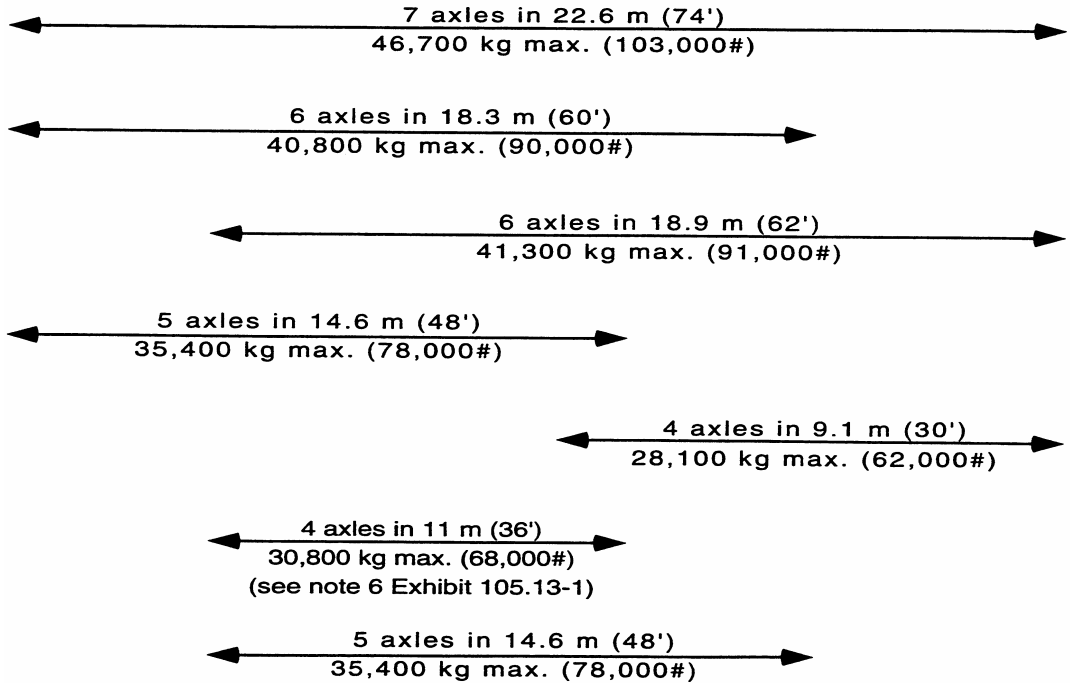

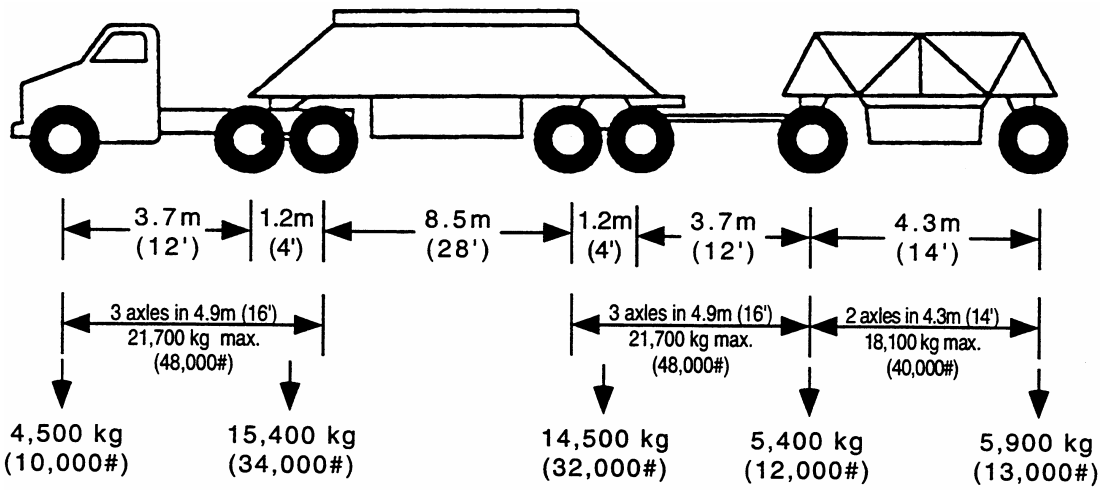

The overall spacings are usually not a problem, unless a short wheel base tractor is used. Also the critical areas are the internal bridge measurements for axles 2 –5 and 4-7.

The diagram above shows what would be a legal weight loading for this vehicle. Various small changes could be made, but axle loading, combination axle loading, and total gross loading must meet chart requirements to be acceptable. No tolerances are allowed. If there are any questions concerning weight distribution to the axles, actual axle weights should be determined of loaded trucks.

105.16 ACCEPTANCE

Prefinal Inspection

Prior to completion of the project and before removal of the Contractor's equipment, the Resident/Regional Engineer shall arrange for a prefinal inspection. The prefinal inspection should be scheduled far enough in advance to allow all interested parties to attend. The Resident/Regional Engineer should send a notification letter to representatives of involved parties, such as

Contractor

District Engineer

Assistant District Engineer

Construction Engineer

District Maintenance Engineer

FHWA (when applicable)

Port of Entry (when applicable)

Local Agencies (when applicable)

The Contractor shall be informed in writing of the results of the prefinal inspection.

Final Inspection

The Contractor must notify the Resident/Regional Engineer upon completion of the work. The Resident/Regional Engineer shall promptly notify the District Engineer that the project is ready for final inspection. The final inspection should be scheduled to allow all interested agencies to attend. Copies of the letter to the Contractor confirming the inspection date should be sent to those groups that will be involved with the prefinal inspection. The District Engineer, or a delegate, shall make a final inspection to determine the acceptability of the work and immediately notify the Contractor in writing. The date of final acceptance will be the date of the final inspection, provided the work has been satisfactorily completed.

Format for the final acceptance letter should be as follows:

****

Contractor's Address Re: Project No.

Location

County

Contract No.

Gentlemen:

In accordance with Subsection 105.16 of the Standard Specifications, a final inspection of the captioned project was made on _____. During the inspection, it was found that all construction items provided for and contemplated by the contract were completed satisfactorily.

I, therefore, accept this project on behalf of the State (and county, if involved). Work commenced on this project on _____ and the completion date was _____.

Sincerely,

DISTRICT ENGINEER'S NAME

****

The final acceptance letter should refer to any guarantee or warranty remaining in effect after the completion date.

Copies of the prefinal inspection and final acceptance letter should be sent to the following:

Local Public Agency (on LPA projects)

Assistant Chief Engineer (O)

Construction Engineer

Materials Engineer

Right-of-Way Supervisor

Local Roads Engineer (on LPA projects)

Federal Highway Administration (on interstate projects only)

Applicable District distribution

The FHWA policy requires that a final inspection be made by one of their representatives on all federal-aid projects having full FHWA involvement and on other selected projects with a

contract amount exceeding $ 1.0 million. Generally, the FHWA will participate at the same time as the other agencies, but may choose to do so later. This later review may be made without involvement of District personnel if the District wishes. This may be desirable on small projects as the FHWA representative could make a final review when traveling to or through a District. When the FHWA representative cannot attend the final inspection, the District should proceed with the final paper work as though they had participated in the review. All FHWA concerns must be addressed prior to final acceptance.

Internal Notification of Project Completion

Upon completion of some construction projects, changes to the information contained in the department's official location referencing database (MACS System) will be required. When changes are required, the Geographic Information Systems section of the Division of Transportation Planning will request information needed from the Resident/Regional Engineer on the ITD-2820, Report of New Location Referencing Information. The form should be sent to the Resident/Regional Engineer prior to the preconstruction conference. The Resident/Regional Engineer is responsible to complete the bottom portion of the ITD-2820 with the appropriate dates and notify the GIS section on or before the date when paving is complete, the first work by State forces occurs, or the road is opened to the public, which ever comes first. The Resident/Regional Engineer has ten (10) working days to submit a hardcopy of the ITD-2820 to the GIS Section.

105.17 CLAIMS FOR ADJUSTMENTS AND DISPUTES

This section of our specs has been modified extensively in recent years so it is important to read the current spec carefully and understand it. It is fairly self-explanatory. However, there are some important concepts that are reinforced and clarified here in this section. The construction issue resolution process is outlined with a flow chart in exhibit 105.17 – 1, which is located at the end of this section.

On federal-aid full oversight projects the FHWA must be kept informed about the details and handling of claims at all stages of review. Claim settlements on full oversight projects require FHWA prior approval and must be supported and justified in accordance with 23CFR635.124.

1. Alternate Dispute Resolution Provisions

The March 2002 Supplemental Specs introduced the Dispute Review Board (DRB) and the Claim Review Board (CRB) concepts to the specs. These are alternate dispute resolution methods. DRB and CRB are a whole new way of doing business regarding claims and are endorsed wholeheartedly by ITD, the Idaho AGC, and the FHWA. In fact the Idaho AGC and the FHWA were partners with ITD in writing and implementing the DRB and CRB specs. For more about DRB and CRB see #23 and #24 below.

2. Notice of Intent to File a Construction Claim

The Contractor is required to give you written notice of intent to file a claim as soon as there is a dispute regarding money or contract time. Do not wait to see if the dispute can be resolved by

further discussion or negotiation between the Contractor and RE. If it is resolved before the claim submittals are required that is great. But if it is not, then the integrity of the claim submittal requirements are maintained by the immediate notice of intent to claim. The notice of intent to file a claim puts the dispute into the 105.17 section of the specs which, among other things, requires the Contractor to keep complete records of extra costs and time incurred and to provide copies to the RE as the costs are incurred (typically daily so the RE can verify the costs). This is critical.

The Contractor may waive his rights to claim if he doesn't give timely notice **and** the Department's position has been compromised.

3. Claim Issues

Unrelated claim issues must be processed as separate claims. Unrelated means that the basis (entitlement) for the claim issues are different. Do not allow the Contractor submit a claim, or notice of intent to claim, with more than one entitlement issue. One entitlement issue, such as redesign of the road alignment, can cause several different types of damages (quantum) such as increased labor cost, increased equipment costs, increased time, etc, but all the damages must be caused by that one entitlement issue. This way each claim issue will require its own notice of intent to claim and will run on its own clock regarding submittal and review times.

4. Supplement to Notice

This is to be submitted within 15 calendar days of the written notice of intent to claim. This supplement is important in that it defines the entitlement issue and the critical elements of the claim and provides additional facts which may aid in early resolution of the claim.

5. Formal Claim Submittal

The Contractor is required to submit full and final documentation to support his claim no later than 60 days following the date the claim has fully matured. On some claims, such as a delay claim, the Contractor might say the delay will have a ripple effect and will have impact damages until the end of the project thus extending the maturity date. This can be true, and certainly the Contractor has the right to state his case for what constitutes maturity. In this situation it might make sense to suggest to the Contractor that he submit his claim for review of entitlement only, pending maturity of impact delays and damages. Contact the Claims Engineer to discuss this situation.

6. Claim Certification

Make sure the Contractor provides a separate certification on each claim. The certification must be signed by the Prime Contractor, not a subcontractor.

7. Waiver of Contractor's Right to Claim

The spec says that the Contractor *"waives his right to pursue the claim under the contract"* if he fails to give proper notice of intent to claim or if he fails to follow the claim procedures in accordance with the contract, including time frames and content. In these situations it is very important to make sure our communication with the Contractor has been very clear and well documented before we make the decision that the claim has been waived. This should be discussed with the Construction Engineer before action is taken.

8. Contractor Recordkeeping during Disputed Work

This is very important. The claimant (Contractor) bears the burden of proving both entitlement **and damages**. That is why our spec says *"Throughout any disputed work, the Contractor shall keep complete records of extra costs and time incurred. The Contractor shall provide copies of these records to the Resident Engineer as they accrue (daily if necessary) so they may be reviewed and field verified while the disputed work is taking place."* It is the Contractor's responsibility to keep complete records of claim costs and it is our responsibility to review and verify his records as the costs are accrued. We are not ruling on entitlement at this time. We are simply verifying the labor and equipment hours and material costs that the Contractor is claiming as extra costs, whether or not entitlement is eventually found. Just tell the Contractor to submit copies of his claim cost records to you for review each day that they occur. Review them, note any disagreements and discuss them with the Contractor immediately. When it becomes time to review the Contractor's final claim document our field cost verification is basically done.

9. RE Review of Claim

Keep in mind at all times that our job is to **review** the Contractor's claim submittal. If the submittal is unclear and you find yourself trying to figure out how he came up with his data, or what he is trying to say, then stop and ask yourself if you are reviewing, or guessing and interpreting regarding the claim. If the claim, or portions of it, is unclear have the Contractor clarify it.

The first step in review of a claim is to make sure the submittal is complete. If it is not then let the contractor know what is missing.

The Claims Engineer has developed a standard Claim Analysis Format that can be used to guide the RE Review.

The RE's decision should be sent to the Contractor via Certified Mail, return receipt requested.

10. Contractor's Burden of Proof

It is a well established principle of contract law that the claimant (typically the Contractor) bears the burden of proving entitlement, damages (quantum) and causation by a preponderance of evidence. The claimant does not have to prove the case with absolute certainty or beyond a shadow of doubt. The Contractor must show: (1) a contractual or legal basis for the claim, (2) that the claimed damages are a reasonably accurate representation of the actual damages and, (3) that the claimed damages were caused by the entitlement issue.

11. RE Claim Package

When a claim is appealed to the Chief Engineer the RE must provide the Claims Engineer with a copy of the RE's Claim Package developed during the RE Claim Review. The RE Claim Package is to be assembled neatly in a 3-ring binder and properly tabbed. It is to include the following:

a. **RE decision letter**. The RE's claim decision letter to the Contractor.
b. **RE detailed claim analysis**.
c. **Chronology**. Include all pertinent claim events, correspondence, notes, change orders, AVO's, diaries, verbal conversations, etc. All referenced documentation should be included in the Documentation section of the Claim Package.
d. **Documentation**. Place all the pertinent referenced documentation in chronological order.
e. **Photographs**. Include all pertinent photographs.
f. **Cost Verification**. The Contractor bears the burden of proving both entitlement and damages (cost and/or time). Therefore, he must provide documentation to support the claimed damages. The Contractor's claimed damages must be understandable, properly supported by documentation, and must be in agreement with contract requirements. The RE must verify these costs as a reasonable estimate of actual damages. This cost verification must be done whether or not the RE finds entitlement to the claim because it forms the basis for settlement if entitlement is subsequently found or if we negotiate a settlement.
g. **Construction Schedules**. Include all pertinent schedules.
h. **Pay Estimates**. Include all pertinent estimates.

12. CE Review of Claim

The Claims Engineer will perform an independent review of the claim and will present his findings and recommendations to the Construction Engineer, Assistant Chief Engineer (Operations), and the Chief Engineer for a decision.

If the project is Federal full-oversight, the Claims Engineer will submit a full copy of the claim package to FHWA for review when it is received from the RE. The Construction Engineer and FHWA will subsequently meet with the Assistant Chief Engineer (Operations) to discuss the findings and recommendations of the Claims Engineer and agree on settlement of and Federal participation in the claim.

Federal-aid participation in all NHS project claim settlements must be based on the requirements of 23 CFR 635.124. Federal-aid participation in non-NHS project claim settlements must be based on the allowable cost principles of OMB Circular A-87.

13. Contractor's Right to be Heard

The spec says that *"In connection with any appeal proceeding under this subsection, the Contractor will be afforded an opportunity to be heard in support of their claim at any level of review."* It is very important that we offer this at both the RE and CE level early in the review. This is basic common courtesy in addition to being contractual. At these meetings it is very important to have the proper field personnel in attendance who can verify and/or question what the contractor is saying. Sometimes the Contractor doesn't feel this meeting is necessary. If this meeting is requested by the Contractor, it should be scheduled after the reviewer (RE or CE) has had a chance to review the Contractor's claim submittal and is familiar with the issues. It should be explained to the Contractor that this meeting is not a negotiation session but it is simply his opportunity to verbalize and clarify his claim. It is the Contractor's meeting and he should provide an agenda so we can prepare for the meeting and have the proper ITD personnel in attendance. These meetings have, in most cases, been very helpful in clarifying the claim issues for both parties and they are just good business.

14. Unreasonable Review Time

The spec says, *"At any state of the administrative process, if the above review time restraints are unreasonable due to the complexity of the claim under consideration, either party will notify the other and mutual consent will be required to extend the times set forth for decision at any level."* We interpret this to mean that if either party needs more time to submit or review the claim then this can happen by mutual consent. If this happens it will be put in writing since the penalty for missing submittal time frames is severe (waiver of claim).

15. Audits

The spec tells the Contractor what he is to provide in his claim to justify and document his request for additional compensation. It says the documentation shall contain, at a minimum, *"the exact amount sought and a breakdown of that amount into the following categories:"* The spec then goes on to list the categories, i.e., labor, materials, equipment, etc. So typically the Contractor's claim submittal contains cost summary sheets showing the claim costs broken down according to the spec. Usually the Contractor's claimed field cost summaries can be verified by the RE by reviewing the daily records that the Contractor submitted for review during the disputed work, or by reviewing the RE's own cost records and diaries. However, where the Contractor's claim costs cannot be verified by the RE's project records, such as Job Site and Home Office Overhead costs, the contract allows the Department access to all the Contractor's and Subcontractor's cost records pertaining to the claim. The auditor can be an ITD employee or a consultant.

16. Binding Arbitration

The Chief Engineer's claim decision is the end of the administrative process. If the Contractor has exhausted his remedies under the administrative process, and wants to continue to pursue his claim, our latest spec change provides for mandatory binding arbitration as the last step in the claim process under our contract.

17. Payment for Claims

All payments for claims will be made by change order. If the project is Federal full-oversight, appropriate approvals by FHWA are required.

18. Claims Tracking System

The Claims Tracking System (computer program) is designed to keep all levels of management informed about all construction claims. It is designed to capture pertinent claim administration events so that at any time it will answer the questions: "What's going on with that claim?" and "Who's got the ball?" It is not designed to contain all the little details of the claim. Typically the RE will enter events when the claim is at the RE level, the Claims Engineer will enter events when the claim is at the CE level, and Legal will enter events when the claim is in arbitration or litigation. However, the general rule is for either the RE, Claims Engineer or Legal to enter pertinent info whenever it becomes known.

The Claims Engineer maintains and archives the system. If a claim is resolved at the RE level the RE must complete the entries to point that the story is complete and then contact the Claims Engineer to have the claim archived.

19.Claims Avoidance

Good communications are particularly important in the prevention of disputes and claims; therefore, open lines of communication must be maintained, especially between the project staff and the Contractor. If at any time a problem arises that cannot be resolved at the Resident/Regional Engineer's level, a meeting should be held involving the Contractor's personnel; project and other District staff; and, if appropriate, headquarters staff. Decisions reached at such meetings shall be recorded and copies distributed to all concerned parties.

The best way to handle claims is to prevent or avoid conditions and situations from which claims are likely to arise. The following methods can be used to minimize the number and severity of claims:

1. Participate in the final design review, especially the special provisions, for clarity, bidability, and constructability. Suggested corrections should be transmitted to the District Project Development Engineer. The Resident/Regional Engineer and staff should follow through to insure the District Design section addresses suggestions and corrections.

2. Provide a complete and accurate set of plans and specifications. The Resident/Regional Engineer should review these documents prior to advertisement. If problems are noted, addendums should be issued.

3. Correct or adjust plan and specification errors or inconsistencies that may be discovered in advance of work being performed. This may require negotiations and issuance of contract change orders. Do not just wait to see how situations develop.

4. Listen to the Contractor's alternatives. An alternative method, equipment, or materials may give equal or better results. Evaluate alternatives while maintaining control of the work.

5. Explain if necessary, the reasons why the plans or specifications require a specific performance, method, or end result. Do not rely on statements such as, "You bid this project with that requirement. We expect compliance."

6. Stay advised of the Contractor's continuing plans of operation. Knowing the Contractor's plans help with deployment of personnel and other resources and can avoid delay of the work. Ensure that the CPM schedule is accurately updated and in accordance with the contract. The Initial Schedule must comply with the terms of the contract which includes meeting contract milestones and completion dates.

7. Promote preoperational conferences with the Contractor. Preoperational conferences held in advance of major phases of the construction provide ideal opportunities for the Contractor to communicate how the work will be accomplished and the Resident to communicate how the work will be controlled and accepted.

8. Avoid directing the Contractor's work or personnel.

9. Maintain adequate records of the work, progress, contractor's resource deployment, and conditions affecting the work. Maintain complete job diaries. Use letters or AVO's to confirm verbal orders to the Contractor. Take photos before and during construction and document location, date, subject, project identification, and person taking the photo.

20. Consultants

Sometimes, the services of a claims consultant may be necessary because of time constraints, the specialty nature of the work involved, complexity of the claim, or a high dollar value of the claim. If a consultant is being considered for claims management or analysis, contact the Construction Engineer for advance approval.

21. Photographs

A complete photo log must be maintained on each claim issue as well as the construction in general. This is critical. Each photograph must be electronically date-stamped and have all the pertinent data describing the photograph attached to it. With all the new technology available

today there is no excuse for not having a complete photo record of the project including the claim events.

22. Assistance from HQ Construction

The Claims Engineer and the Construction section staff are available to provide early claims assistance to the Resident/Regional Engineer. The Construction staff can help with specification interpretation, legal opinions, schedule analysis, cost verification procedures, claims analysis reviews, and discussions with the Contractor. The Construction section can also advise the Resident/Regional Engineer of measures to take once a Contractor has filed a Notice of Intent to Claim.

23. Dispute Review Board (DRB)

The Districts will determine which projects will have a DRB and the DRB Special Provision will be inserted into the bid document. Guidelines for project selection are shown below in Table 1. The District will also have to determine whether the DRB will be a 1-member or a 3-member board and insert the proper bid item into the contract. DRB costs are split 50/50 between the Department and the Contractor so the pre-entered contract amount (contingency amount) represents the Department's 50% share of the estimated total cost of the DRB. Guidelines for the pre-entered DRB contingency amount are shown below in Table 2. Get a copy of the DRB Special Provision and become familiar with it. The spec is almost identical to the new CRB spec 105.18.

A DRB hearing (formal or informal) on any claim issue will be held if requested by either party (Contractor or Department). DRB decisions (findings and recommendations) are non-binding but they are admissible to the extent permitted by law in any subsequent dispute resolution proceeding. DRB's have been used extensively throughout the US and the world in recent years. In the overwhelming majority of cases, the DRB decision resolves the disputed entitlement issue. Since DRB's typically rule on entitlement only, they can give their decision on this even if all the costs and impacts aren't yet known. This early decision on entitlement is very beneficial to keep the project moving forward properly regarding contract time and gives both parties some direction about how to track and control claim costs going forward.

In accordance with the DRB Special Provision, ITD and the Idaho AGC have agreed on a DRB Roster of pre-qualified candidates from which to select DRB members. Each District ADE has a binder containing the current DRB Roster and resumes. The DRB Roster will be maintained by the Claims Engineer and updated yearly in collaboration with the Idaho AGC.

Table 1 – DRB Project Recommendations

Engineer's Estimate	Recommendation
$0 – $10M	DRB Optional (0,1 or 3 members per District Recommendation)
$10M - $20M	DRB Required (1 or 3 members per District Recommendation)
Greater than $20M	DRB Required (3 members)

Table 2 – Guidelines for Pre-entered DRB Contingency Amount

Type of DRB	*Estimated Contingency Amount
1-member DRB	0.18% of estimated total construction cost
3-member DRB	0.35% of estimated total construction cost

* this represents the Departments 50% share of the total estimated DRB costs

24. Claim Review Board (CRB)

CRB is now included in our Supplemental Specifications under Subsection 105.18. CRB is very similar to DRB. CRB is a standing Board established to hear claims statewide that are appealed to the Chief Engineer from projects that do not have a DRB established to hear the claim. If a DRB is established for a project and is available to hear the claim that claim will not be eligible to be heard by the CRB on appeal to the CE. The idea here is make the parties use the DRB if it is available on the project.

CONSTRUCTION ISSUE RESOLUTION PROCESS

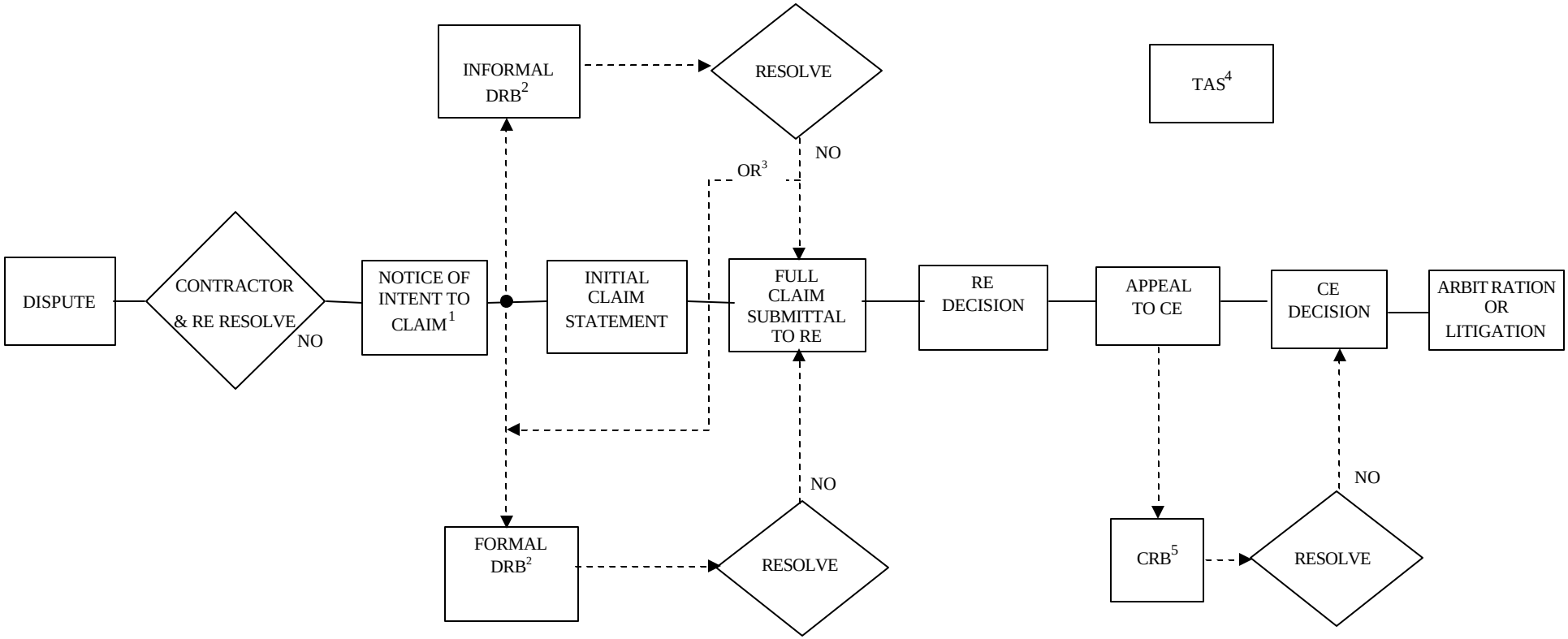

NOTES:

1. Notice of Intent must be given per 105.17 whether or not DRB or CRB is anticipated.
2. Formal or Informal DRB may be requested at any point during the RE review after notice of intent. However, the earlier the better.
3. Informal DRB may be resubmitted to formal DRB.
4. Technical Analysis Support (TAS) is available at any point in the process. See Subsection 105.19.
5. CRB will not be available for claims on those projects where a DRB was established and available to review the dispute.

105.18 – CLAIM REVIEW BOARD SPECIFICATIONS (STATEWIDE STANDING BOARD)

The March 2002 Supplemental Specs introduced the Dispute Review Board (DRB) and the Claim Review Board (CRB) concepts to our contracts via wording in Subsection 105.17. DRB and CRB are referred to as alternate dispute resolution methods because they are not our standard method as described in Subsection 105.17. DRB and CRB are a whole new way of doing business regarding claims and are endorsed wholeheartedly by ITD, the Idaho AGC, and the FHWA. In fact the Idaho AGC and the FHWA were partners with ITD in writing and implementing the DRB and CRB specs. In accordance with the CRB specification, the current members of the CRB were jointly selected by ITD and the Idaho AGC.

CRB is very similar to DRB. CRB is a standing Board that has been established to hear claims statewide that are appealed to the Chief Engineer from projects that do not have a DRB established to hear the claim. DRB's are established for a particular project only. CRB is a standard supplemental spec and therefore applies to all contracts. DRB is a Special Provision and therefore will apply only to selected projects.

CRB will not be available for claims from those projects where a DRB was established and available to review the dispute. The idea here is to encourage the parties to use the DRB if it is available on the project.

The CRB and DRB specifications are quite detailed and self-explanatory. However, if you have any questions please contact the Claims Engineer.

105.19 – TECHNICAL ANALYSIS SUPPORT (TAS) SPECIFICATION

The March 2002 Supplemental Specs introduced this new spec. This spec provides another tool to help resolve contract disputes. The spec defines a contractual process for the parties (Contractor and the Department) to bring in a neutral technical expert (TE) to review a technical dispute issue and provide non-binding findings and recommendations. Costs of the TAS are shared equally by the parties.

A typical situation where this might be used would be on a complicated schedule delay analysis. Rather than both parties hiring their own experts and then disagreeing on the results, the parties would agree on a neutral scheduling expert to come in and perform the schedule analysis with written (non-binding) findings and recommendations.

105.20 – VALUE ENGINEERING CHANGE PROPOSALS (VECP)

This subsection relates to the process concerning the review and implementation of a Value Engineering Change Proposal (VECP). The Department encourages Prime Contractors to submit a VECP on behalf of themselves and/or their Subcontractors. The purpose is to encourage the use of the Contractors' and their Subcontractors' ingenuity and experience in arriving at alternative, lower cost, and time saving construction methods for contract requirements with the intention of sharing the resulting direct cost savings between the Department and the Contractor.

The VECP program should be discussed at the preconstruction conference so the contractor is made fully aware of the program and that it is available for use. Innovations should be encouraged.

The VECP program offers benefits to the state in instances where a change proposal (without impairing essential functions and characteristics of the items or of any other part of the project including, but not limited to, service life, reliability, economy of operation, ease of maintenance, desired aesthetics, and safety) offers one or more of the following:

- Enhances the design at reduced cost to the state.
- Results in a net savings over the contract cost.

The program offers a low-cost opportunity to use the experience and creative talents of the contractor. Contractors participating in the VECP program take pride in contributing actively to the final development and construction of the project.

Review Process

The review process for a VECP should include the development of a review schedule to ensure the reviewing agency can meet the contractor's time-frame. Remember that all VECP's occur during the construction phase of a project and time is usually short.

A contractor's participation in a VECP program involves a certain amount of risk. It costs money to search for realistic savings which will be shared by the state, and the contractor cannot expect all proposals to be accepted. However, the program offers an opportunity to contractors to demonstrate ingenuity, innovation and construction excellence and receive financial benefit.

Care should be taken to ensure that a VECP does not compromise any essential design criteria or any preliminary engineering commitments such as environmental mitigation measures.

Any cost savings generated to the contract as a result of VECP offered by the contractor and approved by the Department will be shared equally between the contractor and the Engineer. The Contractor's costs for development, design and implementation of the VECP are NOT eligible for reimbursement. The Department's estimated costs for evaluation, review and implementation of the VECP will NOT be included in the calculation of net savings. Payment for a VECP will be made through the change order process as outlined in Subsection 104.03, and will be considered as full and adequate consideration for performance of the work of the change order.

When computing the savings generated by the VECP, make sure that the original contract bid prices are representative of fair market values for those items which will be deleted by the proposal.