600.0 INCIDENTAL CONSTRUCTION

Access Control Issues

During the course of a construction project, issues of access or access control may arise. Issues involving access control or encroachment on to the State right-of-way must be handled in accordance with ***Administrative Policy A-12-01***, the current versions of the **Access Management Standards** and **Procedures for Highway Right-of-Way Encroachments** Manual.

All changes to an approach or driveway with respect to width, location or allowed use must be addressed on the ITD-606 form prior to construction or documented during project closeout by having District Right-of-Way record the changes in the appropriate documents.

Questions should be directed to the District Traffic or Right-of-Way sections or their headquarters counterparts. All changes that do not meet the requirements of *Administrative Policy A-12-01* must have the Chief Engineer's approval. Additionally, FHWA must give approval for any changes involving the Interstate access. Normally the Construction Section will make this coordination.

All issues involving access control or encroachment on to a local right-of-way must be handled in accordance with the local entity's (county, city or highway district) policy and should be directed to the local entity for resolution.

If increases or decreases in costs are involved in the changes, a change order must be prepared. All changes must be noted on the **"as constructed"** plans and in the appropriate right-of-way documents.

Additions and Deletions to Landowner Facilities

The addition or deletion of pipes, fences, ditches, minor structures, or similar features shall be covered by a supplemental right-of-way agreement and if necessary a change order. If a fence, gate, or similar item is not installed, the material can not be given to the landowner.

Some manufacturing organizations may not have established metric standards for their products, i.e. pipe lengths, guardrail lengths, etc. Consequently the metric equivalents in this section are approximate only.

Conversely, some products, i.e. corrugated metal pipe diameters, reinforcing steel, concrete designations (classes), etc., have been standardized for metric sizes and designations. These are fixed and also do not necessarily reflect direct mathematical conversions. The nearest equivalent size or designation is shown.

601.00 CONDUITS

Pipe Lists and Ordering

Since most contracts now involve contractor surveying the Engineer should verify that the Contractor is preparing pipe lists in accordance with Subsection 106.02. In the rare event that the surveying is performed by the State the Engineer should prepare and furnish to the Contractor the corrected list of sizes and lengths of pipe at the earliest opportunity, thus avoiding a late delivery and delaying the progress of the work.

Ensure care is exercised in preparation of the pipe list. The list should be prepared from the field stake notes for installation and not from information taken from the plans which are only an estimate. Installations, such as siphons, that require special fabrication at the plant for elbows and bends must have an accompanying line sketch showing the exact dimensions and angles needed. Copies of the pipe list should be retained by the Engineer.

The adjacent landowner should be contacted, if possible, to assure that the irrigation and drainage facilities planned will fit the landowner's operation after the construction of the project. The direction or method of irrigation may have changed since the design was completed. The right of way agreements must be checked to ensure that requirements coincide with the plans. Supplemental agreements may be necessary to effect changes that are advantageous to the owner and the Department.

Staking

At the time the pipe list is made up pipes should be completely field staked. Staking may not always be done at this time; but if the Contractor's operations can accomplish the staking, it is advisable to do so. Many different methods are used to stake pipe. Generally, an offset line is used showing the alignment of the pipe and a grade reference from this line to the flow elevation of the pipe. Short pipe may only require end offset points for alignment with a grade reference.

Another method for staking pipe involves a set of field notes showing what was staked with space provided on the same notes for the installation inspector to record the re-measure dimensions for excavation and backfill. This consolidation of field data simplifies the computation of quantities for final payment. On projects where an exceptionally large amount of pipe is to be used, the Contractor or the Engineer may create a field form that would include all original field data and subsequent inspection data.

Inspection

Pipe should be inspected in the field, and rejection due to damage or manufacturer's defect is the responsibility of the field inspector. Remember that as pipe is delivered to the project, it will be handled many times and may become damaged. Thoroughly inspect each length of pipe, making sure that it is the type called for on the plans and that no defects exist. Special attention should be given to bituminous-coated pipe for uniformity in coating and scuffmarks. Concrete pipe should be checked for roundness and cracking from transit. Rubber gaskets used with concrete pipe must be examined to ensure that the gaskets are of the proper size and quality.

Pipe will be certified as outlined in the Quality Assurance Manual. Do not overlook the inspection of the gasket and gasket lubricant for conformance to specifications.

Checked all pipeline installations for alignment and grade. Each joint shall be checked for proper fit, the presence of a gasket, proper alignment and that it forms a good seal.

All trenches are susceptible to dangerous cave-ins. Be aware of OSHA requirements and avoid unsafe practices. Various methods of shoring can be employed. On deep trenches, a movable metal box may be pulled along through the trench with the complete operation of placement being carried out; i.e., fine grading, pipe placement, backfilling, and tamping. If a deep trench has sheeting, the sheeting should be withdrawn gradually as the backfill is placed and contact with the trench walls is gradually established.

Backfill should be placed on both sides of the pipe in even lifts so as to avoid pushing the pipe out of alignment. Large size granular backfill should be placed so that the fill does not drop directly on the pipe and cause impact damage. Special protection should also be given to trenches in urban sections that are left open for any period of time. Proper signing, delineation, and barricades must be erected to make the public aware of the potential danger.

Every cable, pipe, tube, or any significant object that the trench intercepts shall be recorded with the following information: description (kind, size, etc.), stationing, depth (from a reference datum), and what the Contractor did about the object. If the service of a disturbed line is stopped due to trench excavation, the Contractor should immediately undertake the necessary action to restore service. Applicable information should be added to the as constructed plans.

Some projects call for the same size of metal pipes at different locations with different thickness (gages). Generally heavier thickness is because of higher fills, but the needs for a heavier thickness might also be due to soil pH or the pH of the water being transported. Be sure to get the right pipe in the right location and check with the District Design section before changing a pipe thickness.

Documentation for Pay Quantity

On projects containing a large number of conduits the ITD office staff should maintain a check sheet for all conduits on the project. The location and size can be entered with a subsequent entry showing the final quantities. The procedure simplifies the total inventory of conduit and will preclude any duplication of payment.

All conduit stake notes and computations should be kept in a logical sequence for ready reference and verification. A little time spent setting up good conduit records greatly contributes to the accuracy and ease of work later.

Complete field notes and survey records of the original ground and final re-measure are essential for computing the actual quantities of structure excavation and compacting backfill. Good coordination must exist between the survey crew and the installation inspector.

Estimated quantities may be used for backfill and excavation prior to the final measurement and computation for quantities. These entries, in both the diary and ledgers, should be shown as estimated quantities.

The diary will also be used to verify the activity, date, and location of the work.

Reports

Report compaction of backfill on the ITD-850, Nuclear Density and Compaction Report for Soil and Aggregate.

602.00 CULVERTS

General

The specifications for installation of pipe are intended to provide a lasting and well-designed conduit. The designer cannot foresee special problems that may result after a trench is excavated. Foundations should be carefully examined and unsuitable foundation material removed. Unsuitable materials include but are not limited to: construction debris, organics or other soft soils, oversized rocks and frozen material. Removal is shown on the standard drawing.

During the backfilling operation, the inspector must verify the required density of the backfill by compaction tests as required by the minimum testing requirements. Tests may only be omitted when some other special means of compacting backfill is approved and used. Adequate hand tamping of the backfill material under the sides of the pipe is very important. Pipe may be damaged, after the project has been completed, by settlement of the backfill.

Uniformity of the bedding grade is usually checked with a reference string line pulled parallel to the bed prior to pipe placement. Careful inspection of the bed shall insure that no large rocks are embedded in the graded surface. Rocks just below or at the surface of the bed may act as point bearing and damage the pipe causing subsequent leaking or failure.

As soon as the inspector has approved the pipe bedding, the structure excavation and compacting backfill measurements should be taken. Re-measurement should be completed prior to placement of the foundation material.

The additional weight of hoisting equipment next to an open trench may create a safety hazard and shoring may be required. Whenever an unsafe condition is discovered advise the Contractor and stop all applicable work until the situation is remedied. Sandy, supersaturated soils are particularly susceptible to sudden cave-ins.

Placing Corrugated Metal Pipe

The inspector shall make certain that the rivets or bolts on the joint band angle iron are not pulled through the band due to excessive tightening. Each band must be tight and the pipe ends butted together for a corrugated metal pipe to function properly. Be sure, in the case of metal culverts, that a pipe of the proper thickness (gage) is being installed. A common practice is to install pipe prior to earthwork operations and then allow vehicles to travel over the pipe. A pipe placed in this manner is susceptible to crushing due to heavy loads. The inspector should check all pipes to ensure that they are in their original undamaged condition at the completion of earthwork operations.

Bituminous coated corrugated metal pipe often will be scuffed during handling. After the coated pipe has been placed, the scuffed areas shall be coated with hot penetration grade asphalt. Additional applications may be necessary to achieve the required thickness of coating. The bituminous coating on pipe bands must also be inspected to ensure full coverage. Currently there is no thickness specification.

Placing Concrete Pipe

The pipe bed, after fine grading, shall have depressions dug out for the pipe bells. The pipe shall lie on the bedding along its length with the exception of the depressions for the bells. Under no circumstances shall the pipe be supported at the bell. The inspector must make sure that the bell is clear of the ground after the connection is made to the next length of pipe.

Reinforced concrete pipes of larger dimensions are stress-oriented using elliptical or double line circumferential steel for reinforcement. According to the placement of this steel, the pipe is marked for the top and bottom alignment. These marks shall lie in a vertical plane.

Occasionally, while placing reinforced concrete pipe of 24 inches (600 mm) diameter or less, a bell will be somewhat tight for the spigot. The Contractor, in forcing the joint together, may cause hairline cracks in the bell that are parallel to the length of the pipe. The Contractor should advise the materials supplier of the condition, and the pipe may be subject to rejection. This condition may be detrimental to pipes that are under pressure, such as siphons or irrigation lines.

Rubber gaskets require care in fitting. The gasket must be fitted properly in order to obtain tight joints. To insure good fitting joints, keep gaskets and joints clean. A very small amount of soil will greatly inhibit proper installation. Lubricants, such as flax soap, bentonite vegetable soaps, etc., as recommended or supplied by the pipe manufacture are used on the joints. Petroleum products are NOT permissible for joint lubricants.

Documentation for Pay Quantity

On projects containing a large number of pipes, the Engineer should maintain a check sheet for all pipes on the project. The location and size can be entered with a subsequent entry showing the final quantities. The procedure simplifies the total inventory of pipe and will preclude any duplication of payment.

All pipe stake notes and computations should be kept in a logical sequence for ready reference and verification. A little time spent setting up good pipe records greatly contributes to the accuracy and ease of work later.

The length of the culvert shall be confirmed by measurements and noted in the diary or on pipe notes. Payment shall not be made for lengths greater than approved by the Engineer. Quantities shall be measured and reported to the nearest foot (0.3 m). Compacting backfill and structure excavation is paid on the basis of quantities calculated from cross-sections and in accordance with Section 210.

When the culvert ends in a headwall or minor structure, the back of the headwall will be the outer limit for payment of structure excavation and compacting backfill. Excavation for pipe outside of the roadway prism will be paid for as structure excavation the same as within the roadway prism unless otherwise specified.

Complete field notes and survey records of the original ground and final re-measure are essential for computing the actual quantities of structure excavation and compacting backfill. Good coordination must exist between the field survey crew and the installation inspector.

Estimated quantities may be used for backfill and excavation prior to the final measurement and computation for quantities. These entries, in both the diary and ledgers, should be shown as estimated quantities.

The diary shall also be used to verify the activity, date, and location of the work and may also be used for reporting the quantities and final measurements.

Reports

Report compaction of backfill on the ITD-850, Nuclear Density and Compaction Report for Soil and Aggregate.

603.00 PIPE SIPHONS

Placing Pipe Siphons

The information in Section 602, Culverts, applies to siphons as well. Siphons usually are trenched into steep back slopes. After initial hand tamping along the pipe and bed contact zone, compacting backfill may be performed on horizontal lifts if the slope is too great for parallel-to-bed lifts. Exhibit 603.00-1 depicts this method.

The importance of sealing the inlet and outlet cannot be overemphasized. Water escaping at these locations invariably follows the outside of the pipe down into the roadway. This condition not only causes washing around the pipe, but also may lead to excessive moisture in the roadbed at that location. The condition may compound itself by frost heaves or softening of the travel way and cause failure. Compaction at these locations is especially critical. The entire length of the siphon right and left of the roadway prism shall be backfilled with specified material. Siphon headwall wings and aprons require special care; the length of the wings and depth of the apron should be extended, if needed, to prevent washing out. Dense soil should be compacted around the headwall providing additional sealing against water penetration. Be sure, in the case of metal siphons, that the proper thickness (gage) of pipe is installed.

Testing Siphons

The entire length of the siphon should be left exposed until the siphon has been tested. After filling the siphon with water, the inspector must examine the pipe for leaks. Some seepage through the pipe walls will occur on concrete pipe but many times will cease after soaking awhile. Pouring a reinforced concrete collar may repair joint leakage. Exhibit 603.00-1 depicts an acceptable repair collar.

Documentation for Pay Quantity

Documentation for Siphons is similar to Culverts. See 602.00.

Reports

Report compaction of backfill on the ITD-850, Nuclear Density and Compaction Report for Soil and Aggregate.

604.00 IRRIGATION PIPE LINES

Placing Conditions

Placement of irrigation pipe shall conform to the placement requirements for culverts. (See Section 602.00.) Compaction of the backfill material placed within the roadway prism (i.e., between cut or fill catch points) shall be as specified for culverts. Backfill outside the roadway must be compacted by “puddling”, tamping, or rolling in a competent manner even though no percent of compaction is specified. (Puddling is the orienting of soil particles into a dense position by the use of water. Use of this method is particularly advantageous around minor structures since the “puddling” action will occur when the facility is placed in operation. Be sure, in the case of metal pipelines, that the proper thickness (gage) is installed. See Section 601.00.)

Testing Line

Corrugated metal pipe irrigation lines generally have greater leakage than concrete pipelines, so before the pipeline is accepted, the pipe shall be tested for leaks. Leaks shall be located and repaired in a satisfactory manner before approval. The inspector must personally supervise the test and maintain a close check on the progress of the test.

Concrete pipe will absorb water and many small cracks will close up. Special care should be exercised in the protection and care of irrigation pipelines during construction. Concrete lines are especially susceptible to crushing or breakage due to the lack of metal reinforcement in them. The Contractor must be advised to keep heavy equipment away from irrigation pipelines after installation. Risers or outlets should be clearly marked to avoid damage.

Documentation for Pay Quantities

Documentation for irrigation pipe lines is similar to Culverts. See 602.00.

Reports

Report compaction of backfill on the ITD-850, Nuclear Density and Compaction Report for Soil and Aggregate.

605.00 SEWERS

Placement of a sewer line, manholes, catch basins, and inlets shall conform to the placement of culverts and siphons. Excavation and backfill shall be as discussed in Section 602, Culverts. During the placement of a sewer line, severe ground water conditions are often encountered. Many times, little or no space is available to perform dewatering operations. Whenever possible, the pipe should be installed when the ground water level is at its lowest elevation. Sewer line placement under adverse conditions requires extra care to insure proper gasket installation.

Manhole connections may be made by laying the pipe continuously through the manhole location. The manhole base is then placed. After the base is cured, the pipe is broken out to provide access to the line. All broken masonry must be removed and irregular edges grouted. It is also permissible to form an invert in the manhole base rather than laying pipe through the manhole if desired.

During placement operations, the inspector must spot-check the grade with a level. Good practice is to spot-check the grade points every 20-30 ft (6-9 m) or once on pipes of 3-6 ft (1-2 m) lengths. The inspector must check all of the grade stakes, verify the entire grade and check the beginning and ending elevations at manholes, catch basins, etc.

Placement of sewer lines in urban areas requires the utmost control for grade. Storm sewer lines are designed to take care of all surface drainage in the project. A change in grade on curb and gutter will almost invariably cause a similar change in grade on a catch basin or flow line of the sewer. Complete checking of all surface grades and line grades cannot be overemphasized.

When the project will not be completed in one season and the catch basins have been installed, but the pavement is not complete, provisions must be made for getting the drainage into the basins. Holes may be left in the wall at the necessary elevation. The holes should not be too low, as this will cause washing and plugging. The holes should be of 4-6 in. (100-150 mm) in size to avoid plugging.

Testing Sanitary Sewer Line

The sequence of operations in testing a sewer line is as follows: using pipe plugs, a section between two manholes (including the manholes) is blocked off so that water may flow in the pipe between the two manholes but not enter the line before the first manhole or after the second manhole. Exhibit 605.00-1 shows a sewer line test. The inspector must be present during filling of the test section to check that water can flow from one manhole to the next manhole. The head measurement is made in the upstream manhole. The measurements of the water depth in the manhole allow water volume loss to be determined from manhole dimensions. Both manholes' water levels will drop and the two volumes of water must be added together.

An alternate method for testing sanitary sewer lines has been added to the specification. This low-pressure air method must have special attention to assure that a good, firm plugging system is used. A 12 inch (300 mm) diameter plug will produce 450 pounds (2002 Newtons) of force and increases by the square of the radius of pipe being used. Safety precautions must be taken due to the high safety risks that are involved with this method.

Documentation for Pay Quantities

Documentation for Sewer Lines is similar to Culverts. See 602.00.

Manholes, catch basins, and inlets shall be computed and reported to the nearest whole unit. Sewer pipe shall be measured and reported to the nearest foot (0.3 m).

Reports

Report compaction of backfill on the ITD-850, Nuclear Density and Compaction Report for Soil and Aggregate.

606.00 PIPE UNDERDRAINS

General installation conditions are the same as for culverts. Perforated pipe is used for under drains and normally is placed with the perforations down. The placement helps prevent infiltration of silt, gravel, or other solids that might clog the line and destroy the effectiveness of the system. Placing the perforations down also lowers the water table.

Special backfill should be used to provide a free draining material to carry the water from the aquifer to the pipe. Care must be taken to assure that this flow is not interrupted by the introduction of a stratum of impervious material, such as topsoil. Materials used for special backfill should be sound and not degrade under water conditions or compactive effort. Backfill material should be graded to meet adjacent soil size and pipe perforations. Use of filter fabric is encouraged to prevent soil migration and pipe clogging. In the case of metal pipe, be sure the proper thickness (gage) is installed.

Documentation for Pay Quantity

Documentation for Pipe Underdrains is similar to Culverts. See 602.00.

Reports

Compaction of backfill and special backfill when required, shall be reported on ITD-850, Nuclear Density and Compaction Report for Soil and Aggregate.

607.00 EMBANKMENT PROTECTORS

A special problem is usually encountered when compacting the material around spill pipes and embankment protectors. These installations are highly susceptible to washouts at the inlets. Pipe washouts are usually due to inadequate sealing around the inlet structures. A dense, fine material should be used for the bedding and backfill of the area around the inlet. The soil should be free of organic material and provide a seal against water penetration to reduce the possibility of a washout. The entire bedding and backfill material of a spill pipe or embankment protector should be a dense material whenever possible. A common error in constructing the area around the inlet is not providing adequate slope for the drainage to enter the pipe. In many cases, especially on relatively steep grades, the drainage runs past the inlet area. In the case of metal pipes, be sure the proper thickness (gage) of pipe is installed. See Section 601.00.

Documentation for Pay Quantity

The diary shall be used to verify the activity, date, and location of the work and reporting the quantities and final measurements. If the project has a large number of these items, a summary sheet may be helpful. Embankment protectors shall be computed and reported to the nearest whole unit. Discharge pipe shall be measured and reported to the nearest foot (0.3 m).

Reports

None.

608.00 APRONS FOR PIPES

Inspection

Aprons should be inspected in the field, and rejection due to damage or manufacturer's defect is the responsibility of the field inspector. The inspector must keep in mind that as material is delivered to the project; it will be handled many times and may become damaged. Thoroughly inspect each apron, making sure that it is the type called for on the plans and that no defects exist. Concrete aprons should be checked for roundness and cracking from transit. Rubber gaskets used with concrete must be examined to ensure that the gaskets are of the proper size and quality.

Do not overlook the inspection of the caulking, gasket and gasket lubricant, if applicable, for conformance to specifications.

Care must be taken during installation that the placement of the apron lines correctly with the direction of the flow to ensure that the flow will not bypass the apron or undermine it. This is especially critical on skewed installations. Rip rap should be applied if necessary to prevent erosion around and under the inlets/outlets.

It is also critical that the mounting base material be at the proper elevation and compacted properly as must the backfill material.

Documentation for Pay Quantity

On projects containing a large number of aprons, the Engineer should maintain a check sheet for all aprons on the project. The location and size can be entered with a subsequent entry showing the final quantities. The procedure simplifies the total inventory of aprons and will preclude any duplication of payment.

When the culvert ends in an apron, headwall or minor structure, the back of the headwall will be the outer limit for payment of structure excavation and compacting backfill on the culvert. Structure excavation and compacting backfill work related to the apron installation is considered incidental.

Aprons will be paid for by the “each” unless otherwise indicated.

The diary shall also be used to verify the activity, date, and location of the work and report final pay quantities.

Reports

None.

609.00 MINOR STRUCTURES

The same quality of workmanship is required for minor structures as any other structure. The cost of minor structures is extremely high as compared to other work on structures.

The adjacent landowner should be contacted, if possible, to assure that the minor structures planned will fit the need and operation of the landowner after the construction of the project. Many times, the direction or method of irrigation has changed since the design was made.

Right of way agreements must be checked to assure their requirements coincide with the plans. Supplemental agreements may be necessary to effect changes that can be advantageous to the owner and the Department.

Staking

Normally, this work is performed by the contract surveyor. In the rare case that State personnel perform this work the following guidance is offered. Minor structures will be constructed in conjunction with drainage facilities. Plans on minor structures should be checked for discrepancies. Omissions with respect to the number of ditches connecting a structure and errors in direction of flow are frequent. The elevation of the flow line of the ditch with respect to the flow line of the pipe often varies from that presented in design. Elevations of the tops of minor structures require careful attention and a vertical extension of the structure walls may be required. The top of an irrigation structure should be at least 4 inches (100 mm) higher than the ditch banks. Correct elevations are essential so that minor structures serve the purpose intended.

When the original staking is done for minor structures, the surveyor should be familiar with the entire drainage pattern. A minor structure should not be staked as an isolated part of the system. Verify all elevations match so that a continuous uniform flow from one right of way to another is obtained. Many times, situations change between the time the designer first conceived what should be constructed and the time of actual construction. The surveyor may be the only ones able to discover needed changes.

Inspection

Concrete construction requirements apply to minor structures and must be followed. The inspector should check all forms prior to placing concrete for correct dimensions and steel reinforcement. The location of keyways, bolts, and other special items that must be in place before pouring the structure must be checked. A check should be made from a distance to see that the portions of the structure are in the correct place and proper position. Do not assume that the survey crew has correctly interpreted the design. Do the wingwalls fit the ditches? Can the landowner regulate the flow if more than one ditch begins at the structure? The appearance of these minor structures from the roadway must also be considered.

Documentation for Pay Quantity

The quantities representing the minor structure should be verified by quantity computations. If the original computation matches the plan quantity within 0.1 cubic yard (0.1 cubic meter) for concrete and 5 pounds (2.5 kilograms) for metal reinforcement, no additional check is required. On projects where there are a large number of minor structures, a complete structure listing by location and station is advisable, as it may become difficult to determine which structures have been built and paid for. The list should be kept in conjunction with a pipe summary.

Verification of the quantities by computations is the only documentation necessary for ledger entries. Estimated quantities may be used prior to final computations; however, there should be few occasions when this is necessary. Concrete shall be computed to the nearest 0.01 cubic yard (0.01 cubic meter) and paid to the nearest 0.1 cubic yard (0.1 cubic meter). Metal reinforcement, to the nearest pound (0.5 kilogram) and timber to the nearest 0.01 MFBM (0.25 cubic meter).

Reports

Report compaction of backfill on the ITD-850, Nuclear Density and Compaction Report for Soil and Aggregate.

610.00 FENCES

Temporary fences may be required to restrict livestock or protect the work. All temporary fences are the responsibility of the Contractor unless otherwise called out in the contract. The 107.08, 107.11, and 107.19 subsections should be cited for enforcement.

Any changes in the location or number of approaches, driveways, or gates must conform to the requirements of the access control established for the project and will require the Chief Engineer's approval if either the location, width, allowed use or number of approaches or driveways does not meet with the requirements of *Administrative Policy A-12-01*.

The addition or deletion of pipe, fences, ditches, minor structures, or the like shall be covered by a supplemental right of way agreement. Approaches shall be constructed in accordance with the plans and **Access Management Standards** and **Procedures for Highway Right-of-Way Encroachments** M**anual**.

Staking

Particular attention should be given to the staking and establishment of the fence lines. An offset line within the right of way may be desirable. A good offset line, 5 to 10 feet (1.5 to 3 m) from the right of way line becomes an excellent reference for other features on the project. Extreme care must be exercised in staking fence around interchanges to insure the right of way lines close accurately in these areas. Sometimes the fence stakes may need to be denoted with a color-coded lath to aid the Contractor in keeping other staked features on the project separate from the fence. Reference *Administrative Policy A-05-19* for location of the fence with respect to the R/W line.

Inspection

The inspector should first determine that all materials on the project meet specifications. Fence is accepted on a pass/fail basis. Should the Contractor desire to install fencing material before test results are available for acceptance of the materials, the inspector should inform Contractor that replacement of unacceptable material will be the Contractor's responsibility. The inspector must be able to identify and locate all different lots of materials so any unacceptable materials can be removed.

Obstructions and vegetation must be cleared from the fence line prior to construction and in conformance to the specifications. The inspector must be satisfied that the fence is properly staked. Judgment on the part of the inspector must be exercised in determining the correct wire tension. Area climate and temperature at the time of installation will determine the amount of tension.

The inspector should also be aware of the location of utilities, headwalls and pipe structures that may interfere with the proper alignment of the fence. An on-the-spot review prior to installation will avoid unnecessary conflicts.

The Contractor should be cautioned that equipment and work must be confined to within the right of way or construction easement. A fence Contractor that trespasses outside of the right of way or construction easement, without the property owner's consent may strains public relations and could result in legal action.

Documentation for Pay Quantities

Final fence quantities are to be entered in the ledger only after final measurement has been made. Daily estimates may be used for progress estimate payments. The diary shall be used to verify the activity, date, location, and final and estimated quantities for payment. A summary sheet may be used for the braces and gates. Braces and gates shall be computed and reported by the unit. Fence shall be measured and reported to the nearest foot (0.3 m).

Reports

None.

611.00 CATTLE GUARDS

Inspection

Thoroughly inspect all materials making sure that it is the type called for on the plans and that no defects exist.

Care must be taken during installation that the placement of the guard matches the existing roadway slope or crown and that the appropriate pit slope exists for drainage.

It is also critical that the bearing pad materials be at the proper elevation and bonded properly or secured as specified.

All exposed metal surfaces must be painted as called for and all hardware fasteners must be galvanized.

Documentation for Pay Quantity

Structure excavation and compacting backfill work related to the cattle guard installation is considered incidental unless otherwise indicated.

Cattle guards will be paid for by the "each" unless otherwise indicated.

The diary shall also be used to verify the activity, date, and location of the work and report final pay quantities.

Reports

None.

612.00 GUARDRAIL

Since the designer does not have the opportunity to view the completed roadway for detailed guardrail design, the Engineer should inspect the roadway for guardrail requirements and revisions as soon as cut and fill sections are completed in the grading operation. In many sections, the rail may have to be extended to reduce a hazard. Immediately after this roadway inspection, the Engineer should develop a corrected guardrail order list so that the Contractor may obtain the correct number of posts and lengths of guardrail. At the preconstruction conference, the Contractor should be advised of the possibility of guardrail changes.

The appearance of guardrail is critical under the aspects of highway beautification. Elevation of the tops of posts shall be uniform giving a smooth transition into curves and slopes. The posts must be well tamped to assure vertical alignment as well as safety. Care shall be taken so as not to violate design standards when changes are made in the field. Generally, lengthening a run will not violate a standard. Shortening of a run of guardrail beyond that needed for embedment, interchanging of terminal types, modifying post lengths, or connections, etc. may violate a design standard and should be checked by District Design before implementing. A design exception may be necessary.

Note during installation that end terminals (both interim and permanent) which are left exposed to traffic where the speed limit is higher than 35 MPH and that could spear, vault or roll a vehicle are not in compliance with NCHRP-350 and need to be protected or replaced as applicable..

Documentation for Pay Quantity

The diary shall be used to verify the activity, date, and location of the work and report final pay quantities. Terminal sections shall be computed and reported to the nearest whole unit. Guardrail shall be measured and reported to the nearest foot (0.30 m). The pay quantity for guardrail should conform to the ordered amounts and all ordered amounts must have proper certifications for the quantities involved.

Reports

None.

613.00 SIDEWALKS

Sidewalk appearance is important with respect to highway beautification. Uniform color and edge alignments are two important appearance factors. Long-term appearance depends upon prevention of: cracks, surface spalling, and differential settlement.

Subgrade compaction shall be carried out according to specifications. Occasionally water conditions or soft soil conditions may require a course of aggregate base to be placed under the sidewalk.

Sloping sidewalks may require a nonskid surface, such as transverse brooming, in order to reduce slipping hazards.

Documentation for Pay Quantities

The diary shall be used to verify the activity, date, and location of the work and report estimated and final quantities. Calculation sheets or field notes may also be used to report final quantities. Quantities will be calculated to the nearest 0.1 square yard (0.1 square meters) and rounded to the nearest square yard (square meter) on the estimates.

Reports

Report compaction tests on the ITD-850, Nuclear Density and Compaction Report for Soil and Aggregate.

614.00 URBAN APPROACHES

Driveways and approaches are normally constructed to stop at the right of way line with the intent to provide a serviceable access and protect the road edge. Radii as well as grade should be staked. Care should be taken so that the width and stationing is staked according to plan with a smooth elevation transition to the existing driveway or access road surface.

All changes to an approach or driveway either in width, location or allowed use must be addressed on the ITD-606 form prior to construction or documented during project closeout by having District Right-of-Way record the changes in the appropriate documents and must be handled in accordance with ***Administrative Policy A-12-01***, the current version of the **Access Management Standards** and **Procedures for Highway Right-of-Way Encroachments** manual.

Questions should be directed to the District Traffic or Right-of-Way sections or their headquarters counterparts. All changes that do not meet the requirements of *Administrative Policy A-12-01* must have the Chief Engineer's approval. Additionally, FHWA must give approval for any changes involving Interstate access. Normally the Construction Associate for that District will make this coordination.

If an approach or driveway is moved and if costs change, a change order will be prepared. **All changes must be noted on the "as constructed" plans.**

Documentation for Pay Quantities

The diary shall be used to verify the activity, date, and location of the work and report estimated quantities of materials used. See:

- Surface Courses & Pavement - Section 400.
- Concrete - Section 502.

Urban approaches shall be computed and reported to the nearest whole unit.

Reports

Report compaction tests on the ITD-850, Nuclear Density and Compaction Report for Soil and Aggregate.

615.00 CURB AND GUTTER

Along with sidewalks, the curb and gutter comprise the finishing touches of a road or street. The alignments, finish, matching with old curb, grade, etc., are important factors in the appearance of the final result.

Staking

The spacing of grade and alignment stakes will vary from 10 to 25 feet (3 to 7 meters) depending upon field and design conditions, such as vertical curves and radii. Since 10 ft (3 m) long form sections are often used, a staking interval of 10 feet (3 m) is good practice. Grade stakes for the aggregate base course should not be placed so that the rolled plantmix is ever below the lip of the gutter. This will prevent the roller from overloading the lip of the gutter.

Inspection

Curb curing shall be performed according to the specifications. If curing compound is used, it must be sprayed on immediately after the finishing is completed as specified.

In construction of extruded curbs, there may be a tendency of the machine to climb when placing around a sharp radius and matching to an existing curb. The machine operator must adjust to this situation.

Documentation for Pay Quantities

Diary entries must be made for estimated and final quantities. If a pay item is an estimated amount, clearly mark this is an estimated item. The diary shall also be used to verify the activity, date, and location of the work. Curb and gutter will be measured and reported to the nearest foot (0.3 m).

Reports

None.

616.00 SIGNS and SIGN SUPPORTS

As soon as grading operations permit accurate determination of sign placement and signpost lengths, a list of sign post lengths will be developed by the Contractor for approval by the Engineer in accordance with Subsection 106.02 of the specifications. The list must be developed at an early date, especially where steel signposts are involved, as fabrication may require a considerable amount of time. If the placement of a sign or signs at the location shown on the plans is impractical, the District Traffic Engineer should be contacted to determine a new location.

Foundations

Concrete sign foundations for breakaway steel posts must be set at proper elevations with respect to the finished ground line. A foundation that is located too high becomes a roadside hazard rather than an integral part of a safety feature. A foundation that is too low can also create a roadside obstacle due to impairment of the intended breakaway action by soil or aggregate in the breakaway plane.

Breakaway Post Fabrication and Erection

Inspection of breakaway H beam posts should verify that fuse plates have been installed after galvanizing. If the signposts are delivered preassembled, torque of the fuse plate bolts should be checked on sufficient posts to verify the proper fuse plate bolt tension.

For three and four bolt slip bases proper breakaway of type "A" and "B" signposts is contingent on having the correct torque on the slip base bolts. Over tensioning of these bolts may reduce the effectiveness of the breakaway design and can even cause failure of the anchor bolts on vehicular impact. The slip base bolt torque must be carefully checked.

Break–Safe systems do not require a specific torque. Follow the manufactures recommendations for the hinge plate (fuse plates) couplers and bolts for tightening requirements. Break-Safe slip bases are addressed in Standard Drawings I-8-A (1&2), I-8-B (1&2), I-8-C (1&2) and I-8-D (2&3).

Anchor Bolt Repair

Units with three and four bolt slip bases it is important that high-strength anchor bolts be protected prior to erection of the signposts to avoid having them bent or broken by construction traffic. Repair of broken or bent anchor bolts is quite expensive and welding is not an acceptable method of repair. Broken or badly bent high-strength anchor bolts shall be repaired by total foundation replacement or by using high-strength sleeve nuts.

This second method of repair requires that a portion of the foundation be removed to a point that will permit the installation of the sleeve nut to be entirely embedded in the replaced concrete. The sleeve nut and bolt extension must be adequate in size to develop the strength equivalent to the original design. The sleeve nut and bolt extension must be cadmium plated.

Straightening of badly bent high-strength anchor bolts should not be allowed, as these bolts are extremely brittle. Although they may appear okay after straightening, they are fractured and may later fail under very light loading conditions. For information on high-strength bolts, refer to Exhibits 504.00-1 and 2.

Working Drawings (Shop Drawings)

Working drawings for sign structures and signal supports are to be submitted by the Contractor for approval as indicated in Subsection 105.02 and as modified by Subsection 616.03. Final submittals of shop drawings for these structures shall be transmitted to the Traffic Engineer for storage. The submittal shall be on 22 in. x 34 in. (559 mm x 914 mm) mylars.

The submittal shall also include CADD drawings in the acceptable format.

Documentation for Pay Quantity

The diary shall be used to verify the activity, date, and location of the work and report final pay quantities.

Reports

None.

617. 00 DELINEATORS AND MILEPOSTS

Delineators and mileposts shall be installed at the stations and offsets indicated in the plans.

The Traffic Manual and Standard Drawings should be consulted to verify proper type, use and installation.

Documentation for Pay Quantity

The diary shall be used to verify the activity, date, and location of the work. Quantities will also be documented by diary entry.

Reports

None.

618.00 MARKER POSTS, WITNESS POSTS, AND STREET MONUMENTS

The Traffic Manual and Standard Drawings cover the subject of marker posts, witness posts and street monuments.

Marker posts, witness posts and street monuments shall be installed at the stations and offsets indicated in the plans.

Documentation for Pay Quantity

The diary shall be used to verify the activity, date, and location of the work. Quantities will also be documented by diary entry.

Reports

None.

619.00 ILLUMINATION

This work, as well as other electrical work and signalization, is very specialized requiring the services of a licensed electrical contractor. Few inspectors have had sufficient experience to thoroughly and adequately inspect this type of work. To overcome this problem, it is recommended that the District Signal Electrician work closely with project personnel to assure plan and specification compliance.

Experience has proven that many potential problems can be averted or minimized by a pre-operational meeting involving the electrical contractor or subcontractor, project personnel, and the Signal Shop Superintendent or District Signal Electrician. This special pre-operational meeting should be held immediately prior to starting the electrical work. It is especially important that the Contractor's job Superintendent or Foreman attend this meeting. The conduct of the meeting should be informal and cover the real "nuts and bolts" problems that may be expected or that have occurred on previous projects.

Common Construction Errors

Over the years, a number of recurring construction errors have been discovered regarding electrical work either at final inspections or later when maintenance work was being performed. A list of these more common errors follows. This list is included as a reminder for inspection personnel and should not substitute for the above recommended pre-operational meeting where this list should be presented and discussed with the Contractor.

A. Conduit Installations

1. Use of plastic conduit for elbows greater than 45° instead of steel, as required, causing conduit to be cut when wire is pulled.

2. Steel elbows require bonding when used with Rigid Plastic Conduit.

3. Minor bends in conduit without proper use of bending tool causing partial collapse of conduit and resultant problems pulling wire through conduit.

4. Use of rocky material for conduit backfill instead of fine soil or sand which results in eventual collapse of conduit.

5. Failure to clean dirt and moisture from conduit prior to pulling wire.

6. Failure to cap stub ends and free ends of conduit resulting in intrusion of soil and moisture.

7. Conduit buried at less than required 24 in. (0.6 m) depth causing future maintenance problems, such as inadvertent cutting or mashing of conduit.

8. Placement of conduit by other than a qualified, licensed, electrical Contractor. This can result in rejection by the State Electrical Board.

9. Placement of conduit at locations other than shown on the plans without proper indication on the as-constructed plans.

B. Foundations

1. Improper or wrong size anchor bolts installed or installed out of alignment for proper pole base plate fit.

2. Foundation not set at proper elevation. Too high or too low an elevation to permit proper action or exposure of the slip base or break away coupler.

3. Improper backfilling or lack of mechanical tamping around foundation may result in eventual tipping of the foundation and pole.

4. Failure to grout under the base of pole. Note: 4 bolt slip base bolts and break-away steel neck couplers should not be grouted.

5. Failure to insure skirts are installed on breakaway coupler installations.

6. Improper placement of structural concrete per section 502.03 (exceeding max 5 ft. drop)

C. Pole Erection

1. Failure to accurately plumb poles after all hardware is in place.

D. Expansion Fittings

1. Failure to install a proper conduit expansion unit at structure expansion joints.

2. Failure to provide expansion couplings on long runs of plastic conduit may result in buckling of the conduit.

E. Wiring

1. Failure to use a wire lubricant prior to pulling through conduit may damage the wire, its insulation, or the conduit.

2. Use of extreme force and speed to pull wire such as with a vehicle may damage wire, its insulation, or the conduit.

3. Unauthorized splices in buried or concealed junction boxes that create future maintenance problems.

4. Failure to use insulated bushings at conduit entrances to metal junction boxes, cabinets, etc. will scuff insulation from the wire when it is pulled.

5. Use of wrong type or size of wire or wire with improper insulation.

6. Failure to use specified wire connectors or wiring methods, approved for the application per the NEC.

F. Grounding

1. Failure to connect poles, junction boxes and other equipment to the service ground by an insulated AWG 8 soft-drawn stranded copper wire.

14-Day Field Test

It is the intent of this specification to provide two weeks of standard operation with photocell, manual, or other specified turn-on control. During this test, the Contractor shall be responsible for all corrective work resulting from improper installation, workmanship or materials. Following successful completion of the test, the Engineer should recommend partial acceptance covering illumination. The cost of power consumed during the test period should be borne by the agency or agencies assigned maintenance responsibility by the cooperative project agreement.

Documentation for Pay Quantities

The diary shall be used to verify the activity, date, and location of the work and the final pay quantities.

Reports

None.

620.00 PLANTING

Landscaping, wetland mitigation and native and wildflower plantings are several areas where construction personnel may become involved with planting vegetation. With an increasing emphasis on the environment, including promoting and preserving biodiversity and enhancing natural beauty and aesthetics, the Department must take positive measures to preserve and restore natural landscapes that have been disturbed by development whenever possible and to achieve desirable results."

Landscaping and Wetlands

The Senior Environmental Planner in the District shall have landscape and planting experience, shall be familiar with the recommended practices and procedures for planting trees and shrubs and provide guidance early in the project and at the time of planting. Projects with landscaping and/or wetland mitigation typically contain contract specifications with a minimum plant establishment period, usually one year.

Trees and shrubs come in various forms i.e., containerized, balled, bare root, and cuttings. The various types of plants require special attention in both in handling and planting. Plants shall be inspected prior to purchase to insure plants are robust and in healthy condition before planting.

Prior to planting, a thorough examination should be performed by the Contractor on all trees, shrubs, grass and native forbs, etc. to ensure they meet compliance and design specifications. The root system of bare-root plants shall be examined and any broken or damaged roots shall be cut off cleanly.

After the original planting, appropriate District personnel shall periodically inspect the condition of plants and planting areas to ensure successful planting and plant establishment. The Engineer will inspect the plants periodically and notify all responsible parties of apparent defects, faults and conditions, and dead plants discovered by the inspection. Correction of apparent defects, faults and conditions, and the removal and disposal of dead plants shall be completed within 10 days after notification. Dead or damaged plants shall be replaced at the earliest suitable time. Plant replacement shall not be postponed until the end of the establishment period.

If immediate replacement of dead or rejected plants is impossible due to seasonal conditions or because specified plants are unavailable, a marker should be placed at the spot of replacement (if necessary) and replacement shall be made during the next planting season.

Native Plants and Wild Flowers

A landscaping project involves any action taken as part of a highway construction project or as a separate action to enhance the aesthetics of a highway through placement of plant material consistent with a landscape design. States are encouraged to plant native wildflowers and native grasses, trees, shrubs, etc. on highway projects as part of erosion control measures, wetland mitigation or restoration, and/or as a total vegetation management program. All work performed in association with landscaping shall be included in the total landscaping expense. This applies to all projects with a landscape, seeding and/or planting design plan.

Guidance information (Fig. 14-528.1) has been included in the Design Manual and provisions for native plants or wildflowers shall be incorporated into each landscape project (including roadside seeding and plantings) unless a waiver has been signed.

Documentation for Pay Quantities

The diary shall be used to verify the activity, date, and location of the work. Quantities will also be documented in the diary.

Reports

- Construction Inspection Reports: ITD-1406 and ITD-2802 may be used as needed.

621.00 SEEDING

Seed Supply and Ordering

When seed is to be supplied by the State it should be available at the Supply Services Warehouse. Order seed using an updated and unnumbered form ITD-2379. The most recent version of the order form shall be prepared and routed to the District Supply Operations Supervisor or appropriate source, prior to submitting the unnumbered form to the Roadside Programs Coordinator for final entry and approval. The following is a set of guidelines to be used when preparing an order.

- Use one ITD-2379 blank form for ordering seed. Do not include any other items except seed on this form. Use a separate ITD-2379 for each project.
- On the ITD-2379, fill in work authorization number (project code), function (or task) expenditure type and organization code, (these codes change periodically and should be filled in by Roadside Programs Coord.), description of seed species, unit of measure (in pounds), and quantity needed. Use appropriate rule codes from TRMS coding manual for all projects on State or local systems. Provide project name and number including key number, and a short description or project location under the comments field.
- Calculate the pounds for each kind of seed species (grass, forbs, and shrubs) needed and add 10% to the amount. Round quantities for each grass seed species to multiples of 50 lbs. (22.68 kg), legume seed species to multiples of 10 lbs. (4.54 kg), and shrub or forb seed species to multiples of 5 lbs. (2.27 kg). Record these quantities on ITD-2379.
- If native seed is desired or specified, contact the Roadside Programs Coordinator for assistance in species selection and quantities. Record pounds for each native seed species requested on ITD-2379 following the legume species list. Quantities of native seed species shall be calculated in multiples of 5 lbs. (2.27 kg) in most instances.
- Use correct name and identifier symbols or codes, as shown in the ITD Roadside Revegetation Guidebook in conjunction with the Design Manual and seed supply listing obtained from Supply Services Warehouse. **Do not** insert ITD catalog numbers.
- Give your best estimate as to date by which you need the seed delivered. Order seed a minimum of 30 days in advance of desired delivery date to ensure order is received in a timely manner. It is best to allow more time if possible, but do not order seed more than 3 months in advance.

- After completing the information on the unnumbered ITD-2379, except for Activity Code and Supply Catalog numbers, route the ITD-2379 to the District Supply Operations Supervisor. The District Supply Operations Supervisor will send the order to the Roadside Programs Coordinator for approval, retaining a copy for District Supply files. The Roadside Programs Coordinator will assign a K document number on the ITD-2379 and sends to Supply Services for data entry. The Roadside Programs Coordinator will return copies of the ITD-2379 to the District Supply Operations Supervisor and Resident Engineer after approving the form.
- Return all unused seed appropriately labeled and in original unopened bags to District Supply. A credit will be made to the original purchase code charging the project, and the District Supply General Inventory Account will be debited. Do not return any containers or bags of mixed seed or any open bags containing unmixed seed. All mixed seed left over or seed left in opened bags or containers shall be transported to the District Maintenance Section and documented on ITD-500. Document the quantities transferred to Maintenance on form ITD-500, Inter-department Correspondence.

Seedbed Preparation

Seedbed preparation includes weed control and soil conditioning which are vital for successful seed sowing and long-term plant establishment. Areas to be seeded shall be maintained reasonably free of weeds by mechanical means or application of appropriate chemicals until seeding time. All weeds shall be kept from going to seed.

Slopes that are 2h:1v or steeper are best addressed by hydroseeding or broadcast seeding. Areas to be broadcast seeded shall be roughen and cultivated immediately prior to seeding at a minimum depth of 2 in. (50 mm) and shall be left in a rough condition, similar to that obtained by walking a crawler tractor up and down the slopes in a perpendicular direction to slope contours. Where slopes are benched or serrated, no additional preparation will be required. Reference the ITD Erosion and Sediment Control Manual as needed.

Frequently, cut slopes are too hard and too smooth to obtain adequate seed coverage from the sloughing of the soil. Cut or excavated slopes steeper than 2h:1v may be constructed with stair-step or serrated conformation (terraces or benches) to encourage vegetative growth and establishment. The steps or serrations shall have approximately 1-2 feet (300-400 mm) vertical dimension with horizontal dimensions to fit the slope. Steps or serrations shall follow approximate contour lines and not be constructed on slopes containing soil types that are sandy, rocky, noncohesive or highly erodible, or in soft rock laminations.

Slopes that are 3h:1v or flatter and areas without excessive rock, gravel, or hardpan soil are best addressed by drill seeding. Soil shall be roughened using normal tilling methods and shall be cultivated to a minimum depth of 3 in. (75 mm). The soil shall be worked to obtain a desirable surface that will permit proper operation of drill seeding equipment. When using ripper hanks or scarifiers, serration intervals shall be set to 3 feet (1 meter) spacing width and 12 inches (300 mm) deep. Unless otherwise specified, seed, fertilizer, and mulch shall be applied in separate operations, one following the other in this order, except fertilizer may be applied with a fertilizer attachment at time of seeding or with water when watering is specified. Tillage and drilling shall be performed cross-slope (horizontal) and furrows shall remain open.

Constructed or excavated slopes 3h:1v or flatter that includes topsoil application shall be roughened and serrated and/or cross-ripped horizontally to the slope, prior to placement of the topsoil. After topsoil has been spread, the surface shall be prepared for seeding as specified above.

On areas subject to severe erosion, the extent of seedbed preparation shall not exceed the area on which the entire seeding and mulching can be applied within a one-day operation. If conditions occur that prevent seeding in appropriate furrows, i.e. depth according to size and dimension of seeds, or if the roughened condition is destroyed, the Contractor shall prepare the seedbed again.

Weed control is part of the seedbed preparation to keep weeds from going to seed and to reduce weed growth and spread from interfering with seeding operations. Weed control shall commence after weed seeds have germinated and plant growth is noticeable. Immediate action shall be taken on existing weeds to control and prevent additional weed seed production. Method of control, appropriate application, and timing are essential for best results. One treatment may be sufficient if these conditions are met. To determine the most appropriate or best method of control, mechanical or chemical application, contact the District Vegetation Foreman or the Roadside Programs Coordinator for assistance.

Weed control is best achieved when applied after the last early season rain and before weeds reach blooming stage. This normally occurs between May and July depending on the region or area.

Weed control is the responsibility of the Contractor and is not considered an extra expense. The method of weed control will require prior approval from the Engineer. If additional weed control is necessary due to Contractor error and/or failure to appropriately seed the areas during the specified seeding season (as required in Section 621) the costs of additional weed control shall be the responsibility of the Contractor.

Broadcast Seeding

Areas to be seeded that are not practical for drill seeding methods may be broadcast using hydro-seeder or dry broadcasting equipment. It was found that some broadcast seeding methods that combined wood fiber, seed, and fertilizer into one broadcast operation, resulted in higher failure rates. The fiber seems to attach tightly to the soil particles and provides a barrier to prevent temperature and moisture penetration. There is greater moisture lost under the fibers than in areas where the seedbed was properly prepared without mulch. In areas where wood fiber and seed were mixed together, most of the seed was found suspended in the fibers above the soil where germination is impossible without high moisture conditions. When fertilizer was included in the mix, a greater number of seeds were found burned in the mix. Therefore, seed, mulch, and/or fertilizer shall be applied in separate applications. Seed shall be applied to the seeded area first followed by mulch and/or fertilizer applications second. Agitation of seed in hydro-seeder shall not exceed 30 minutes due to an increase in seed damaged by the hydroseeder if seed is circulated over 30 minutes.

If certain conditions exist such as soils that are too hard or smooth and which prevents adequate seed cover or soil is too loose to adequately hold moisture near the seed long enough for germination to take place, then alternative actions or methods should be considered and a change order initiated if applicable.

Broadcast rate includes number of seeds distributed per square-foot (square-meter) of surface area. Generally, broadcast seeding requires more seed per acre (hectare) than for drill seeding.

Poor sites such as south and west-facing slopes require more seed than favorable sites; and the upper portions of the slopes should receive more seed then the lower areas on the slope. The number of seed required depends on the type of seeding method used. The following is a list of seeding methods ranged in order of low quantity of seed required to high quantity of seed required: drilling, whirlwind broadcast, hydro-broadcast, and aerial broadcast.

Drill Seeding

Proper drill seeding techniques are important in obtaining successful seeding. Most drill seeding failures are results of improper seed placement in the soil such as too deep, too shallow, or in areas that limit the amount of moisture received thus reducing moisture accumulation near the seed. Several factors affect seed establishment including improper seedbed preparation, incorrect disc spring pressure, failure to use appropriate depth gauges, improper drill or drilling speed, or drilling when wind is too strong.

The seedbed shall be prepared and soil loosened enough to allow disc to penetrate the soil, yet still maintain appropriate depth control. Drill rate shall be accurately calibrated which includes proper row spacing and number of seeds (quantity) distributed per foot (meter) or row length. Drill rows shall be spaced no wider than 6-7 inches (150-175 mm) since wider spacing encourages weed competition and delays stand establishment.

Disc spring pressure should maintain appropriate depth control; however, in some cases, depth gauges may be necessary to compensate for limited spring adjustments. Fast drill speeds and/or high winds can contribute to seeding failures by leaving seed on the soil surface instead of burying the seed underneath the soil.

A double-disc drill with agitator is required when mulch is not included. The drill shall be properly adjusted and operated so that the seed is placed at the bottom of small, cross-slope furrows approximately 2 inches deep (50 mm), with minimal soil covering. Furrows should be set according to the size and dimension of the seed which is shaped by the double-disc openers. Depth of soil covering the seed shall not exceed ½ inch (12 mm) and furrows shall be left open. Drag chains are not acceptable and shall not be used. If the furrows are constructed properly and seed is accurately placed at the bottom of the furrows, the wind and water from the sloughing of the soil should adequately cover the seed.

If mulch is used, the type of mulch and method of application shall be specified. Mulch shall be an approved product and certified by an authorized agency as “noxious weed free.” Mulching shall not be performed when wind interferes with mulch placement. Straw, grass hay, compost, wood fiber, soil amendments (or mulch mixture) or any combination of these materials shall be applied uniformly and as directed. All material applied to the ground shall allow for the absorption and percolation of moisture.

When mulch is used, cross-slope furrows should not be too deep and should be mechanically anchored into the soil. Where grain straw or grass hay is to be anchored by mechanical crimping it shall have approximately 50 percent of the stems exceeding 10 in. (250 mm) in length. Furrows shall be deep enough to hold the seed in place, with maximum soil coverage of ½ inch (12 mm), until mechanical anchoring is completed. This will provide additional seed cover. Mechanical mulch anchoring shall be completed on slopes 3:1 or flatter. Mulch shall be anchored into the soil by use of a heavy disc with flat scalloped discs approximately ¼ inch (6 mm) thick, having dull edges and spaced no more than 9 inches (230 mm) apart.

Anchoring shall be to a depth of at least 2 inches (50 mm) with no more than one pass of the equipment on the same surface. All mechanical anchoring shall be done horizontal to the slope.

Seeding shall not commence when wind interferes with seed placement as determined by the Engineer. Drill spacing shall not exceed 9 inches (230 mm). Legume seed shall be seeded through a separate box from grass seed, with seed spouts out, or broadcast ahead of the drill. Native seeds in the mix shall be broadcast immediately ahead of the drill. Seed shall be thoroughly mixed before placing in the drill or seeder box.

The goal is to place the seed under enough soil with adequate provisions to hold moisture. Both the furrows and the mulch serve to accumulate moisture. Once the drill is adjusted, monitor the drill speed, wind conditions, and free-flowing spouts. If the drill is not equipped with an agitator and the seed bridges over, correction can be made by properly securing baling wire to the drill box and monitoring seed dispersal.

Areas to be seeded that contain intermittent rocky areas may be broadcast seeded by raising the drill while going over the rocks allowing the seed to disperse out. As the drill discs are raised high enough to clear the rocks and the seed delivery system remains in gear, this allows the seed to disperse over the rocks. If this method doesn't work or the drill cannot be raised high enough to clear the rocks, then the seed should be broadcasted by hand or by some other broadcast method. Drilling in or around rocks should be avoided where equipment may be damaged. No equipment shall be driven over the area after seed is in place.

Mulch Anchoring

For slopes 2h:1v or steeper, a mulch tackifier should be used to help anchor the mulch. Mulch anchoring (tackifiers) shall be a material that bonds mulch together in such a manner that it will prohibit the mulch from washing or blowing away after application. When cured, the tackifier shall not be re-emulsifiable. The tackifier shall be soluble (mixable) in water, nontoxic to animals, soil microorganisms, aquatic and plant life and not interfere with or impede seed germination or vegetative growth and establishment. The tackifier shall be applied in accordance with the manufacturer's written instructions and applied at a rate that is acceptable to the mulch, soil type, condition and degree of slope.

Mulch plus tackifier shall consist of premixed packaged wood fiber mulch with tackifier or wood fiber mulch plus tackifier added prior to application and shall be mixed in accordance with manufacturer's written instruction.

If applied separately, a method to differentiate between the tackifier and mulch material, by color or tracer material, shall be incorporated during tacking operations. Tacking shall not be done when wind interferes with tackifier placement.

The general rule in achieving good seed germination and growth is to lightly cover seed with enough moist soil for a two-week period when soil temperature is above 50°F (10°C). Survival of the seeding, after the seed germinates, depends on selecting the appropriate season for seeding and the correct seed mix.

Soil Amendments

Soil amendments shall consist of organic soil applied compost or manufactured organic soil amendments. Compost shall be a Class A compost that meets or exceeds US EPA 40 CFR #503 Regulation, Standard Specifications for Classification Type I and pass a Solvita Maturity Test of 5 or greater.

Manufactured organic soil amendments and/or soil biological stimulants shall consist of organic materials, nutrients, and minerals that show the propensity and performance to facilitate and sustain the germination and growth of vegetation.

Mulch Mixture

Mulch mixture shall consist of mulch, soil amendments, soil biological stimulants, soil microorganism inoculants, bonding fibers, tackifiers, and/or other erosion control and plant nutrient ingredients as specified. Mulch mixture shall be premixed using the specified products and rate, and shall be hydro applied in one operation.

Erosion Blanket

For slopes 2h:1v or steeper, an erosion blanket may be used to stabilize and protect the soil surface. Erosion blankets shall be a material that protects disturbed soils from raindrop impact, surface run-off, and soil erosion. Erosion blankets may consist of either a pre-manufactured roll (biodegradable or synthetic) or a bonded fiber matrix or liquid mixture sprayed onto the soil surface. The type of blanket shall be as specified or approved and shall be installed according to the manufacturer's recommendations or as directed.

The rolled erosion blanket shall be placed with fibers in contact with the soil over the entire area covered. The blanket shall not be stretched taut. The blanket shall be anchored at joints, corners, and along the edges. Blankets on slopes shall be installed vertically to the slope. The blanket edge along the top of the slope and the ends of adjoining blankets on the slope shall be buried and anchored in an approved manner to prevent slipping or displacement of the blanket. The sides of adjoining blankets shall be overlapped, in the direction of water flow. Blankets used in ditches or channels shall have a minimum width of 3 ft. (1 m) Blankets shall be anchored and overlapped in an approved manner so water will neither flow under nor displace the blanket. Adjoining blankets shall be overlapped in the direction of water flow or as recommended by the manufacturer.

The liquid erosion blanket mixture shall be soluble in water and nontoxic to animals, soil microorganisms, aquatic and plant life and not interfere with or impede seed germination or vegetative growth and establishment. The mixture, as well as mixing and applying the mixture, shall be in accordance with the manufacturer's written instruction and applied at a rate for the soil type, roughness of surface, conditions and degree of slope.

Fertilizer

Fertilizer type and application shall be as specified. Fertilizer may be either broadcast (wet or dry) or drilled. For drill seeding method, it is preferable to place fertilizer with the seed at time of drill seeding by use of a fertilizer attachment whenever physically possible. For broadcast seeding method, it is preferable to apply fertilizer as a separate application after seeding. Fertilizer may be applied as dry ingredients or thoroughly mixed in a liquid mixture. Fertilizer may be applied with irrigation water as directed. When fertilizing established stands, fertilizer shall be applied when the average noontime temperatures are 60°F (16ºC) or lower. Fertilizer shall be certified by authorized (or approved) agency and declared or certified as "noxious weed free" prior to acceptance.

Watering

A temporary water delivery system shall be installed by use of either sprinklers or trucks. Water shall be applied by the cubic meter (acre unit) at the times directed. (A one acre unit constitutes application of 0.5 inch of water which will saturate the soil to a depth of 4 in. under average conditions.)

Pipe connections shall be kept tight to avoid leakage and washing. Sprinklers shall be maintained in proper working order. Should runoff begin, watering shall be stopped and the balance applied after earlier water has penetrated the soil. The standard application rate is 16,000 gallons/acre (150 m^3/ha) and constitutes the amount of water which will saturate the soil to a depth of 100 mm under average conditions.

Inspection for 4 in. (100 mm) depth of saturation shall be made by excavating to a depth of 4 in. (100 mm) and observing for wetness. It is intended that the locations of inspection for wetness will be reasonable and not be on "slick spots" or in unrepresentative areas.

Seeding Season

Selection of appropriate seeding season is essential when developing roadside seeding plans and insuring successful seeding on construction projects. Even though other specifications may be established correctly, if the timing of the seeding is incorrect, then the seedlings will most likely fail. There is constant pressure on ITD to expand the seeding time and seasons when this work can be accomplished but the most suitable time for sowing seeds is usually a three or four week window. This information is very useful and should be followed when planning roadside seeding. The contract special provisions contain required dates for seeding based on average climatic and other conditions for the project location. The specifications allow for some adjustment of these dates as directed. The purpose is to provide a specific time for seeding on a given project so that the season falls within a few days earlier or later of the specified time. Any deviation form the specified dates shall be approved by the Engineer.

Seed Mixtures

The specified seed mixture normally includes selected grasses, legumes, some shrubs, and native forbs. Each species is selected because of its unique growth characteristics and/or special needs of the project. There are other definite reasons for using the specified mixtures such as mature height, seedling vigor and longevity, bunch-type grass, size of seed, site suitability, and species ability to integrate or interact with other species during and after establishment. Any deviation from the specified mixes, except for minor substitutions when filling out a seed order from supply, shall be approved by the Engineer.

Documentation for Pay Quantity

An activity log or diary shall be used to verify the activity, date, and location of the work. Payment shall be made based on planned quantities except for authorized additions or deletions unless otherwise noted. When the unit of measurement is based on planned quantity, Subsection 109.01 of the Standard Specifications should be reviewed. If the Resident believes the plans are in error, they should re-measure the area and adjust the pay quantity if necessary. The Contractor may also request a re-measure; and if the quantities are in error, they should be readjusted.

Pay Item	Pay Unit
Seedbed Preparation	Ac (ha)
Seeding	Ac (ha)
Mulching	Ac (ha)
Mulch Anchoring (Mechanical)	Ac (ha)
Mulch Anchoring (Tack)	Ac (ha)
Soil Amendments	Ac (ha)
Mulch Mixture	Ac (ha)
Mulch plus Tackifier	SY (m^2) Ac (ha)
Erosion Blanket	SY (m^2)
Fertilizing	Ac (ha)
Provide Water Delivery System	Lump Sum
Watering	AU (m3)

Reports

None.

622.00 PRECAST CONCRETE HEADGATES

The headgate locations are usually the weakest part of the ditch if good backfilling is not performed. Care must be taken to provide solid bedding and proper backfill. Good, dense material, free of any organic matter, shall be used for backfilling the headgate.

Documentation for Pay Quantity

The diary shall be used to verify the activity, date, and location of the work and reporting quantities and final measurements. Right of way agreements generally dictate the number and location.

Reports

None.

623.00 CONCRETE SLOPE PAVING

Concrete slope paving is subject to undermining and concentrated flows of run-off water along it's' edges resulting in erosion. Care should be taken during construction to ensure all drainage and run off water is directed in a manner that will protect the slope paving.

Documentation for Pay Quantity

The diary shall be used to verify the activity, date, and location of the work and reporting quantities and final measurements.

Reports

None.

624.00 RIPRAP

Riprap shall be placed to the dimensions shown on the plans and typical sections. Refer to the Standard Specifications if thickness is not shown on the plans. Slopes and toe trenches that will receive the riprap must be approved prior to placement of the stone. It may be necessary to cross-section or take three-dimensional measurement of the slopes and toe trench prior to placement of riprap to determine whether or not deficiencies exist in thickness or height. Riprap shall be computed from the staked dimensions.

Types of Riprap

Riprap has several types:

- **Loose Riprap and Hand-Placed Riprap** -- Rock taken from the project excavation can be used, if it meets specifications and is permitted by the Engineer. This material will be paid for as excavation and riprap. However, this material shall be replaced by the Contractor at no expense to the State when the excavation is needed for project embankments or other similar requirements. The swell of the rock and shrink of the borrow must be taken into account when computing the replacement quantity. Subsection 104.07 of the Standard Specifications should be consulted when the above circumstances occur.
- **Sack Riprap** -- This item will be produced using Class 15 (10 MPa) concrete. Care shall be taken to prevent placing in freezing weather if in a wetted condition. The concrete may need to be placed in the sacks in a dry state and dampened in place.
- **Concrete Stabilized Riprap --** The type of concrete used to cover the riprap should be shown on the plans. No concrete shall be placed during freezing weather, and care shall be taken to protect the riprap from damage.

Make sure that the source for riprap is approved. Avoid haphazard dumping which may result in segregation. The finished riprap should be well keyed and present a regular surface having mass stability. Additional guidance may be obtained from the Hydraulic Engineer in Headquarter of Roadway Design.

Documentation for Pay Quantities

Riprap, concrete, and structure excavation shall be calculated on a computation sheet or the diary. The diary shall be used to verify the activity, date, and location of the work. Quantities shall be computed to 0.1 of a cubic yard (0.1 cubic meter) and rounded off to the nearest cubic yard (cubic meter) on the estimate.

Reports

Concrete Delivery Ticket, DH-70, is to be completed for each truckload of concrete (see Concrete Manual for example). The ITD-25 Diary can be used to document other rip rap quantities. See Section 502 of this manual for further details about concrete usage.

625.00 JOINTS

Joints in structures or concrete pavements and the related fillers normally consist of one of the following types:

Construction Joints -- are provided to enable the Contractor to perform the work in reasonable size increments. When placed in a structure, metal reinforcement or dowel bars normally extend across the joint to tie the sections together. A vertically formed bulkhead must be used to hold the concrete to grade and provide resistance for consolidation. If a construction joint is not shown on the plans, then the Bridge Section (for structures) or the Materials Section (for pavements) should approve its location. Construction joints placed in concrete pavements may or may not require the placement of reinforcing steel or dowel bars depending on the design or location.

Contraction Joints -- allow for contraction or shrinkage of the concrete. When concrete sets, a small amount of shrinkage occurs and results in a tension stress that causes the concrete to crack. To achieve a more pleasing surface appearance in the finished concrete pavement, contraction joints are placed, tooled, or sawed at predetermined intervals. The theory is that the concrete will then crack in straight lines at the predetermined joints. To keep foreign matter from wedging into the preformed or sawed joints, they may be filled with a sealer or filler. Tooled joints, such as used in sidewalks, are not sealed; but the tooled joint must be of sufficient depth to control cracking. When the depth of a contraction joint is not specified, the general rule is that it should be at least one-third of the depth of the section of concrete.

Expansion Joints -- provide a clear space into which the concrete can expand or contract without damaging or distorting adjacent material. Expansion joints allow for the expansion and other movement of bridge decks, curbs, sidewalks, etc. They are normally filled with a sealer, pre-formed expansion joint filler, or compression seal. The filler or seal must be firmly secured to the face of the joint or the action of the joint opening and closing will eventually work the material out of the joint. Expansion joints sometimes have dowels to tie the joined sections together. The portions of the dowels that are to allow movement must all be parallel and in the same plane. Improperly installed dowels will actually work as ties and prevent movement rather than allow movement and results in cracking of the connected sections. It is not important as to which end of a dowel is fastened and which end is free to move. Good practice is to have the fixed end of the dowel in whichever portion of the structure is poured first. This practice will allow minor alignment of the expansion end after the dowel is firmly held by the first pour and, thereby, insures proper positioning.

Expansion joints may also have "waterstops" installed to prevent water from flowing through the joint. The waterstop should be carefully installed and bonded into both panels being joined. It must be continuous for any particular joint to form a completely waterproof barrier.

Polymer silicone or similar sealers - rely on their bonding properties to maintain the position in the joint. The joint surface must be clean. Sandblasting is one of the best methods to insure a clean surface.

Elastic joint fillers - are cellular in cross-section and are of a rubber-like material. The elastic joint fillers normally come in coils or rolls and are inserted into the carefully prepared joint with the aid of a lubricant. Care must be exercised not to overstretch the filler. This joint material works best when kept in a state of compression and for this reason it is best inserted during colder temperatures when the joints tend to be more open.

Documentation for Pay Quantities

The inspector should keep proper records as to lot, joints sealed, surface conditions, and temperature. The cost for these items is included in the contract prices for structure or pavement items. The diary shall be used to verify the activity, date, quantity (if applicable) and location of the work.

Reports

None.

626.00 CONSTRUCTION TRAFFIC CONTROL DEVICES

General

Use of construction traffic control devices shall meet the requirements of the current Manual on Uniform Traffic Control Devices (MUTCD) as adopted by the State.

The Contractor shall furnish all construction traffic control devices as shown on the plans, required by the Engineer, and as described in the MUTCD. In addition, all traffic control devices must meet the requirements of NHCRP 350 for crashworthiness so they are not a hazard to the traveling public.

The MUTCD for Streets and Highways, published by the Federal Highway as adopted by the State, establishes the design and application of traffic control devices on all public roads in Idaho. Included in the MUTCD are requirements for traffic control devices to control and guide traffic through or around road and street construction, maintenance operations, and utility work.

Normal design procedure is to establish pay items for certain types of traffic control devices on construction contracts. However, the provisions of the MUTCD and Section 626 of the Standard Specifications apply to all construction, maintenance, and utility work regardless of the presence or absence of pay items established by the contract.

A Contractor's or utility company's operations can change from day to day or even more frequently. Therefore, the Engineer on projects where traffic interference is involved shall designate one person to work with the Contractor or utility company daily in coordinating and tailoring traffic control to fit the work in progress. This person should be a trained traffic control technician or supervisor and, as such, shall be familiar with all the construction traffic control requirements of the Traffic Manual, standard drawings, MUTCD and its supplements. The Contractor or utility company should also designate a Traffic Control Supervisor of comparable responsibility with whom the inspector can recommend, propose, and evaluate the solutions to traffic control problems. It is desirable to have the District Traffic Engineer review and approve long term traffic control schemes, detours, or especially critical traffic control problems.

The Construction Inspection Report (ITD-1406) shall be used to document conformity of the traffic control provided on the project to the plans, Traffic Manual, standard drawings, MUTCD, and any approved modification of the Traffic Control Plan (TCP) at the initiation of the traffic control operation and when changes are implemented. A nighttime review should be included to verify the visibility and adequacy of traffic control devices under the condition of darkness. Subsequent day and night reviews should be made by the Engineer or other qualified staff members periodically and the results documented in the project files using the ITD-1406.

Application of Traffic Control

The part of the MUTCD covering traffic controls for construction and maintenance operations establishes basic principles and prescribes standards for design, application, installation, and maintenance of the various types of traffic control devices. The persons responsible for establishing traffic control plans must be capable of using good judgment in the selection of applicable devices and then using them in accordance with the provisions set forth in the plans, by the MUTCD or as directed by the Engineer.

A well designed traffic control plan normally must satisfy three basic requirements: (1) sufficient traffic control devices must be provided in advance of the work area to adequately warn motorists; (2) adequate visibility and/or protection of the workers and work area must be provided; and (3) the motorist must be safely guided through or around the work area. Consistency in device selection will aid greatly in this effort.

The Standard Specifications, Section 626, provide that payment may be made if bid items are established for several types of traffic control devices, including signs, barricades, drums, tubular markers, vertical panels, advance warning arrow panels, traffic control signal, hazard identification beacons, and pavement striping tape and flexible raised pavement markers.. This specification, however, does not limit the types of traffic control devices for use on projects to the above items. Other devices may be desirable or even necessary. Note: weighted base devices shall include all weights required to retain the device in its' proper position and working order at no extra cost to the State. Some of these other devices are barricade warning lights, floodlights or other types of illumination, traffic cones, delineators, and orange flags to supplement important warning signs. Payment for these auxiliary devices may be provided under the item "Rent Incidental Traffic Control Item".

In addition, guardrail, including "W" beam and concrete rail, although not a traffic control device, has considerable value in some traffic control schemes to protect both traffic and work areas.

Condition and Maintenance

Regardless of whether a traffic control device is covered by a pay item or its cost is incidental to other items, only those devices which are in good condition and meet the requirements of the MUTCD and specifications for color, size, design, intensity, reflectivity, etc. shall be used on a project. It is important that once installed on the project, the devices be kept clean, in a good state of repair, and properly located and supported. Properly installed and maintained devices command the respect of motorists and greatly enhance the desired effect. Conversely, improper devices and sloppy maintenance have the opposite influence on motorists. The project should be reviewed to determine if traffic control is to be monitored on a 24 hour basis. If so it should be clearly specified.

Construction Signs

A. Reflectivity

Sheeting on signs used for traffic control is specified to meet retroreflectivity requirements of either Class "A" or Class "B". Class "A" is enclosed lens retroreflective sheeting and is normally called Engineering grade. Class "B" is referred to as high performance and is much more reflective than Class "A". Class "B" sheeting can be identified by patterns within the sheeting. Class "A" sheeting is void of any such pattern. Generally, the sheeting for red and orange signs will be Class "B," and the sheeting for white regulatory signs will be specified as Class "A." All workzone traffic control devices including Black/Orange signs are required to have Class “B” ,Type III, High Intensity sheeting and a minimum required retroreflective reading as stated in ASTM-4956D. Regulatory Black/White signs are exempted from this requirement. Retroreflectivity readings may exceed minimum requirements, but at no time shall they drop below 75% (percent) of the initial reading for Type III, High Intensity sheeting as stated in ASTM-4956D. Questions regarding acceptability of retroreflective sheeting should be referred to the District Traffic Engineer.

B. Design

The Standard Highway Signs Manual and the MUTCD provides information on the design of the most commonly used construction/maintenance warning signs. Legends other than those shown in the MUTCD may be used provided that the signs shall be of the same shape and color as standard signs of the same functional types, and have been approved in the TCP. Symbols used on signs must be as provided for by the MUTCD.

All sign sizes, text, sign numbering and design must be as indicated in the ITD Sign chart unless approved by the Department prior to use. Sign sizes for standard signs are minimum allowable dimensions.

C. Position, Mounting Height, Location, and Spacing

These requirements are covered in the MUTCD and the Traffic Manual. Some clarification by the Engineer may be necessary regarding the requirements on mounting heights.

The MUTCD establishes basic mounting heights above road surface for primary signs at 5 feet (1.5 meters) for rural areas and a minimum of 7 feet (2 meters) for urban areas. These standards apply to all primary signs with the exception that temporary signs may be mounted on portable supports a minimum of 1 foot (0.3 meter) above the road surface unless otherwise shown in the plans or directed by the Engineer. Temporary signs shall be considered as ONLY those signs which are mounted on temporary supports and used in the workzone for a continuous period of less than three (3) days. Thus, if a sign is needed at a location for a continuous period of three (3) days or more, it must be mounted either 5 or 7 feet (1.5 or 2 meters) above roadway elevation in accordance with the MUTCD. The lower standard does not apply to Regulatory signs such as speed limit, stop signs, etc.

Signs that are left in place when they no longer apply are as much of a problem as not having a needed sign. They may, in fact, create more resentment by motorists than the latter condition. It is imperative that signs that no longer apply be removed; or if not in use for a period not to exceed two (2) hours, that they be covered or moved to a location at least 15-feet from the edge of the traveled way and laid flat to the ground when not required. The cover should be fabricated from material which is not a vapor barrier.

Covers such as plastic garbage bags can cause damage during warm weather to the plastic reflective sheeting mounted on the sign. Signs and sign supports that are not in use beyond the two (2) hour period shall not be allowed to remain on the roadway shoulder.

D. Flagger Signs

It is important that the proper sequence of signs precede the flagger position. The placement of warning signs needs to take into account the length of traffic backup rather than the location of the front of the vehicle queue. Then when the flagger is not required, the signs must be turned, covered, or removed.

Construction Barricades and Drums

A. Reflectivity.

All barricades and drums shall be orange and have white Class "B" retroreflective sheeting.

B. Function, Design, Construction, and Application.

These requirements are covered in some detail by the MUTCD. Some items, however, need to be emphasized:

1. Diagonal stripes on barricades shall slope downward in the direction traffic is intended to pass by the barricade, or in compliance with the MUTCD.
2. Drums or barricades should never be placed in the roadway without advance warning signs. Under conditions such as severe curvature, heavy traffic volumes, etc., it may be advisable to use flashing beacons on single drums or barricades and steady burning lights on a series for night use. All signs and battery operated flashing or steady burning lights shall ONLY be used on devices that have been crash tested and approved for the same configuration and use.

Traffic Control Signal

A. Traffic control signals shall meet all the requirements specified by the MUTCD.

B. Requires interconnection or daily time based synchronization to operate properly.

Flashing Beacons

The MUTCD includes several specific requirements on size, mounting, visibility, flash rate, and lamp wattages under Section 4. Do not confuse a flashing beacon, which normally operates on 110 to 120 volts, 60 Hz.A.C., with a battery-powered barricade warning light.

Advance Warning Arrow Panels

The primary application of this device is to assist in the diversion of traffic; i.e., lane closures on multilane highways and total diversion to an interchange ramp.

The specifications require these devices to be capable of 50% dimming for night operation. This is necessary to reduce driver disability glare that would otherwise result from the 12 to 15 lamps operating at full lamp voltage during hours of darkness.

Project plans will require the use of advance warning arrow panels for lane closures and diversions on multilane highways where the designers anticipated the need for this device. However, if the job conditions or Contractor operations later dictate lane closures or diversions on rural multilane roadways, a change order should be negotiated to establish the use and agreed price of this device. Very short time diversions and lane closures may not justify the use of advance warning arrow panels.

Temporary Pavement Marking Tape

The Standard Specifications adequately cover the materials requirements and application. The color of the pavement marking tape shall be in accordance with the color requirements for permanent pavement markings, which are summarized as follows:

A. Yellow separates opposing traffic.

B. White delineates the separation of traffic flows in the same direction.

C. White is used for pavement marking legends and symbols.

The Resident should request the assistance of the District Traffic Engineer in laying out complex pavement marking schemes.

Temporary pavement markings that no longer apply must be removed immediately.

The specifications require marking of all new asphaltic surfaces, including leveling courses, scrub coats, ATB's, and surfacing courses on a daily basis. Unless provided otherwise, state personnel will be responsible for temporary markings on new seal coats and surface treatments. The markings shall be applied to seal coats and surface treatments immediately following brooming. Paint may be used in lieu of temporary pavement marking tape if the tape will not adhere to the surface.

No roadway shall be opened to traffic until proper pavement markings are in place.

Traffic Control Maintenance

The item "Traffic Control Maintenance" is provided on projects which include traffic control devices. This bid item complements other 626 items and is intended to pay for relocation and maintenance of devices not paid for or rented under other bid items, including incidental traffic control items, and costs associated with providing monitoring and surveillance of traffic control devices.

The traffic control plans and/or special provisions will specify the type of special monitoring and surveillance required if extra attention to these matters is considered necessary due to high traffic volumes, higher speeds, etc. The Contractor should not be expected to furnish personnel for this activity on a full time basis unless the plans and specifications explicitly include this requirement.

Regulatory Speed Control Zones

A reduced speed limit should be based on good judgment, experience, and evaluation of geometrics and should not be based merely on the idea that such action will somehow absolve the State or Contractor of any responsibility in case of accidents.

Prior to establishing reduced speed zones through construction projects, some important considerations should be evaluated:

A. Is there another feasible and possibly better alternative than reducing the speed limit? Studies have indicated that generally fewer accidents are likely to occur if traffic can be safely accommodated at the prevailing speed limit.

B. Based on previous experience, can a reduced speed limit be enforced by a reasonable or normal level of law enforcement?

C. If roadway alignment is one of the factors involved in the need to reduce speed, has safe speed been determined by sight distance determinations and by ball bank indicator measurement on horizontal curves?

D. Can the reduction in speed be held to a maximum of 10 mph (15 km/h) less than the normal posted speed?

Reduced speed zones are often appropriate due to roadway or lane constrictions, temporary surfaces, alignment revisions, construction activity interference, and numerous other reasons. *Transportation Board Policy B-12-03 and Administrative Policy A-12-03* gives the District Engineer the authority to establish special speed regulations through construction and maintenance zones on the state highway system. This is accomplished by letters signed by the District Engineer and directed to the District Lieutenant of the Idaho State Police and local law enforcement agencies stating the special construction zone speed limit, the location, the date it will become effective, and any special application (i.e., during working hours only). Copies of the letter shall be furnished to the Resident, District Files, Traffic Engineer, Construction Engineer, and the Contractor. Speed zone reductions shall be removed as soon as they no longer applies.

When the construction speed zone is removed, a follow-up letter from the District Engineer shall be sent to the law enforcement agencies informing them of the reversion to the normal speed limit.

Establishment of reduced construction speed zones on locally sponsored projects not on the state highway system shall be accomplished with approval of the appropriate governing body. These procedures shall be followed on all projects requiring special speed zones regardless of the origin of the request or requirement. Projects including detailed traffic control plans that show reduced speed zones shall be handled in the same manner as those projects on which speed zone requests originate on the job.

State-Furnished Signs

The specifications indicate that certain guide and regulatory signs will be furnished by the State. This is intended to apply to regulatory and guide signs which are presently installed within the project limits and the construction operations requiring relocation of these signs. However, because some guide signs are difficult to acquire on short notice, the State will also furnish temporary destination signs and route markers.

Traffic Control Plans

It is a Department policy that every highway construction project plan includes a construction Traffic Control Plan (TCP). The TCP will vary in complexity and impact on project costs depending on the type of construction and the speed and volume of traffic to be accommodated.

Department policies which mandate TCP's and key elements of those plans are as follows:

A. *Administrative Policy A-12-04 Traffic Control during Construction, Maintenance, Utility or Private Development Operations*

Key elements of this policy regarding construction projects are as follows:

1. Public convenience must be considered on every project.
2. The movement of Traffic must be inhibited as little as possible.

3. Maximum delay to traffic should not exceed 10 minutes per stop nor 15 minutes total if more than one delay is necessary to move traffic completely through a project.
4. The construction Traffic Control Plan will provide, if appropriate, limitation of Contractors' operations during periods of peak traffic volumes.
5. Construction contracts shall include a comprehensive construction Traffic Control Plan that addresses the safety and efficiency of traffic, pedestrian, and bicycle movement during construction.
6. Any changes to the construction Traffic Control Plan requires the approval of the Engineer or his designee prior implementation.

B. Design Manual, Preliminary Design, Subsection 410-412, paragraph 14-412

These sections of the Design Manual set forth policy and procedures on TCP's. Among items covered and not discussed elsewhere in this manual are the following important points:

1. TCP's for interstate highway projects should provide for minimum interference with the free flow of traffic.
2. Stopping of interstate traffic shall be avoided and only considered in an emergency.

The above described policies cannot be enforced with the Contractor unless they are appropriately adopted by the contract. However, if the designers have neglected including provisions as required by policy or if contract changes are made that may require employment of the described policies, a change order must be prepared to incorporate provision of the applicable policies.

TCP's may be revised at the request of the Department or the Contractor to provide for a better or more efficient plan or to accommodate revised work or a Contractor proposal to pursue project construction in a manner different than anticipated by the designer. Major revisions in TCP's shall be accomplished only after a contract change order allowing the revision is approved. Alternate TCP's will be evaluated for acceptance on the basis of equality of safety and traffic accommodation and cost as compared to the originally planned TCP.

Documentation for Determining Pay Quantities

The diary shall be used to verify the location and type of temporary construction traffic control devices placed on the roadway.

Construction operations are not to begin until traffic control devices are approved by the Engineer.

No payment shall be made for devices which do not conform to the MUTCD. This would include, but not be limited to, installation height and spacing, reflectivity at night and sign face condition.

For ease in calculating it is suggested that the sign chart in the construction TCP list the square foot quantity of each sign. The ledger will summarize the total quantity of the item and reference the diary and charts as the source documents. Quantities shall be computed to 0.01 of a S.F.(1000 sq. mm) and rounded to the nearest 0.1 of a S.F.(10 000 sq. mm) on the estimate.

The inspector assigned to traffic control on the project should number and date each sign, barricade, or drum as it arrives on the project to aid in maintaining an inventory for payment.

As stated in the specifications, a traffic control device once paid for is available for use on the project(s) through the life of the contract, at no additional cost to the State, including for repairing or replacing it. The Traffic Control Maintenance item reimburses the Contractor for handling, etc., once the device has been employed.

If the Engineer approves removal of all construction traffic control devices from the project(s), and it later becomes necessary to reemploy some of the devices, the payment and inventory requirement become reinitiated. An example of this situation would be as follows:

> Paving of a project is completed one year and seal coating is to be done the following year. If the Engineer approves removal from the project(s) of all devices upon completion of paving, it will be necessary to pay the Contractor the following year to provide the required devices. Therefore, it behooves the Engineer to evaluate traffic control device requirements on subsequent phases of construction prior to authorizing their removal upon partial completion of the project.

Furnishing of traffic control devices by a subcontractor or by the Contractor has no bearing on how payment under this item is to be administered.

The diary shall be used to verify traffic control maintenance, date and explanation of work performed. Tickets or ITD-370 or ITD-371 Weekly Force Account sheets would be acceptable documents on a daily basis. Regardless of the means of documentation, concurrence on a daily basis of quantities shall be verified by the Contractor's representative's initials along with the Engineer's representative's initials on the source document. According to the specifications, traffic control maintenance will be measured and paid for by the hours of authorized traffic control maintenance. Hours of traffic control maintenance shall be reported to the nearest 0.5 hour. Any overtime for traffic control maintenance has no bearing when reporting hours worked for Contractor payment.

When a flag person sets up signs, that period of time will be paid as traffic control maintenance. There will be no payment for flagging during that same period of time.

Reports

None.

627.00 PAINTING

Paint removal, disposal, and new painting specifications are changing because of environmental and personnel safety concerns. Field staff should thoroughly review each contract specification when involved in inspection of this type of work.

When the paint arrives at the job site, the inspector must check that the specified paint formula and system is being used.

Each District Materials Engineer has the "Pictorial Surface Preparation Standards for Painting Steel Surfaces," as well as the Steel Structures Painting Manual, Volume I, "Good Painting Practice," for reference material. Each District Materials Engineer also has a copy of Section 2, "Surface Preparation Specifications," from Steel Structures Painting Manual, Volume II. These three guides will be of great assistance in eliminating painting problems.

Painting must be performed under clean, dry conditions. Moisture on the surface will be trapped by the paint and prevent bonding. Moisture or dust in the air will cause a speckled or blotchy appearance. Cold weather also inhibits good bonding of the paint.

The new paint systems must be applied in accordance with the paint manufacturer's recommendations utilizing proper pressures, paint guns, nozzles, etc. Because of the quick drying nature of some paints, the gun must be held close enough to the metal to get the paint to the metal in a moist condition and thereby ensure a sealing coat. Several conditions of improper application, thinning, temperature (too high, too low), etc. can arise that will allow the paint to dry or be nearly dry upon contact with the metal. These undesirable conditions must be corrected immediately.

The painting must follow the sandblasting as quickly as possible. Generally, anything sandblasted one day should be painted with the prime coat the same day unless inside dry storage of the structural steel is utilized. If dew, rain, or other moist conditions dampen the near-white sandblasted steel surface, immediate rusting will occur, and the metal would require sandblasting again.

Inspection of steel that has been cleaned by sandblasting should verify that the surface meets the specified color or preparation. To ensure the proper thickness of paint on the steel surface, the dry film mil thickness shall be checked by means of a gauge or meter. The inspector should document where the depth checks were made and choose checkpoints so as to check all types of surfaces.

Painting of the concrete will be required when noted in the special provisions or on the plans or when initiated by change order. The concrete surface preparation shall be an "ordinary surface finish", as stated under subsection 627.03 (E) of the Standard Specifications. The concrete shall be cured by one of the methods designated under Subsection 502.03 (J) of the Standard Specifications. Painting will follow the manufactures recommendations for the best results.

Documentation for Pay Quantity

Painting will not be paid for separately unless otherwise provided. The diary shall be used to verify the activity, date, and location of the work and may be used for reporting final quantities when painting is a pay item.

Reports

None.

628.00 SNOW POLES

General

Supplemental guidance to the Standard Drawing (G-4) for installing snow poles can be found in the 261 section of the Traffic Manual**.**

Documentation for Pay Quantity

The diary shall be used to verify the activity, date, and location of the work. Quantities will also be documented by diary entry.

Snow poles will be paid for by the "each" unless otherwise indicated with acceptance by the RE letter or as otherwise specified.

Reports

None.

629.00 MOBILIZATION

Mobilization is an item to reimburse the Contractor for monies spent to initiate the start of a project including: bonding, insurance, initial material acquisition etc.

Documentation for Determining Pay Quantities

Subsection 629.05 of the Standard Specification is quite explicit on how the Contractor is to receive payment for the mobilization bid item. This specification does not allow payment for mobilization to exceed 10% of the total contract amount until completion of the project work.

Reports

None.

630.00 FLAGGING AND PILOT CARS

Flag persons furnished by the Contractor to control traffic shall be trained using an ITD approved course and have a valid flag persons card on their person. Idaho's cards are valid for three (3) years from the date of issue. Currently the Department accepts all ATSSA cards and cards issued in Washington, Oregon, Montana and Utah (under a reciprocity agreement with these states) provided they have been issued within the **last three years**. The flag person's card shall be verified and documented by diary entry, recording the card number and the organization and state that issued the card.

Acceptable flagging equipment and attire, as described in the most current issue of the MUTCD as adopted by the State and the contract, shall be used. Care should be taken to reject all equipment deemed to be inadequate. A guide published by the ATSSA can be used to determine the serviceability of signs and some flagging equipment.

All pilot cars shall be equipped with the proper signing and mounting, as designated in the current MUTCD as adopted by the State, and be properly mounted. The vehicles used for piloting shall be in good running condition and be equipped with a roof-mounted, high-intensity, rotating or strobe type amber flasher visible to both oncoming and following traffic.

Documentation for Determining Pay Quantities

The diary shall be used to verify the activity, date, and location of the work. The ITD-370 or ITD-371, Weekly Force Account sheets would be acceptable documents for use on a daily basis. Other district generated forms are also acceptable.

Regardless of the means of documentation, concurrence on a daily basis of quantities should be verified by the Contractor's representative's initials along with the Engineer's representative's initials on the source document.

According to the specifications, flagging will be measured and paid for by the hour of authorized flagging and pilot car by the hour of authorized operation, i.e., if two pilot cars were authorized for six hours each, the pay quantity for that day would be 12 hours. Similarly, if two flaggers must flag traffic for an 8-hour period, payment is made for a total of 16 hours even though a third flagger may have been employed for relief. Hours that are authorized for flagging and pilot car operation shall not include show up time or standby time. Hours of flagging and pilot car operation shall be reported to the nearest 0.5 hour. Overtime for flaggers or pilot car operations have no bearing when reporting hours worked for Contractor payment unless they are being done separately under agreed change order conditions. Flagging paddle and pilot car operating time are by pay units, not payroll hours.

Reports

None.

631.00 CONSTRUCTION MAINTENANCE DURING WINTER SUSPENSION

If winter maintenance is required for a construction project, a pre-suspension meeting shall be held between the Engineer and the Contractor to determine the level of maintenance on the roadway during suspension. The equipment, work force, and materials necessary for the maintenance will be determined at this time. All equipment being used and paid for shall be available at all times and materials necessary for repairs shall be readily available.

All actual loaded labor costs to the Contractor for this work shall be paid for, including travel time (actual costs).

Payment for any work accomplished by a piece of equipment during a one-month period will not amount to less than the equivalency of 100% of the owner's monthly equity rate.

Documentation for Pay Quantities

The diary shall be used to verify the activity, date, and location of the work. Weekly force account sheets should be kept in duplicate and signed by both parties.

Reports

None.

632.00 REMOVAL OF BRIDGE DECK CONCRETE

Removal of bridge deck concrete can be complicated depending on project specific situations. Consult with the Bridge Section if there are any major issues or questions regarding procedures to follow.

Subsection 632 specifies requirements for removing concrete in the upper portion of the deck (Class A) followed by the selective removal of any remaining defective or deteriorated concrete (Class B). All exposed reinforcing steel must be cleaned and debris and water removed.

Prior to the Contractor beginning removal operations verify the following:

- All bridge drains have been plugged.
- Expansion joints and barrier curbs are protected.
- Milling of the overlay, if any, has been satisfactorily completed and accepted.
- The line separating deck sections where removal is not required (see plan sheets) has been saw cut "to *a depth approximately 75 percent of the planned removal depth"*. Note: care should be taken to avoid cutting any rebar.
- The hydro-demolition equipment shielding (typically rubber mats), used to prevent flying debris, is in good condition.
- Adequate protection (e.g. plywood sheets) has been provided to "*protect the public from flying debris both on and under the work site"*. Even when the equipment shielding is in good condition, aggregate and other debris can shoot out and travel quite a long distance.
- Provision for water and residual debris containment are adequate, and prohibited from flowing "*into the vehicular and pedestrian traffic areas and into nearby waterways"*, also including under the worksite. Verify that any temporary collection ponds are lined with an appropriate material.

<u>CLASS A REMOVAL</u>

Class A removal consists of the removal *"of all concrete from the top surface of the deck over the area shown on the plans to the mean depth limits shown on the plans"*. Removal may be accomplished by either hydrodemolition or mechanical means.

Prior to beginning Class A removal, a pre-operational meeting should be held with the contractor. Topics to discuss include:

1) Size and type of equipment to be used. Equipment should be able to make a series of equal passes to remove the requisite width and depth of concrete.
2) Containment of debris and water runoff.

3) Methods for disposal of removed material.
4) Manufacturer representation.
5) Methods to be used for measuring Class A and B removal quantities.
6) Contractor is responsible for depth of cut adjustments during Class A removal. Any work required because of over or under removal or deck "blow-outs" is at no additional cost to the State.

Hydro-demolition

Hydro-demolition involves the pressurization of water and the controlled delivery of a water jet to demolish the cement matrix between the concrete aggregate. It can attain a high production rate while removing concrete to the desired depth. The equipment consists of both a power unit and a demolishing unit. The power unit typically is housed in a large metal container on a flatbed trailer tractor. The demolishing unit is typically a microprocessor controlled wheeled vehicle equipped with a water delivery nozzle. High pressure water is delivered from the power units to the nozzle by flexible hosing. If a water source is not readily available a water supply truck is also required.

Do not allow any work to begin if:

1) A "*qualified full-time representative of the manufacturer of the hydrodemolition equipment*" is not present and available as required by the specification. The representative is required on site during trial area removal and until the work is progressing satisfactorily.
2) Documentation that the equipment "*is operated by qualified personnel trained by the manufacturer*" has not been provided.
3) The contractor does not have "*sufficient spare parts and service to maintain to maintain the operation of the equipment*".

The contractor must satisfactorily demonstrate that the equipment, labor and methods of operations can achieve the specified Class A removal depth. The Engineer designates the location of the trial area and the trial area is then demolished until satisfactory removal (i.e. specified mean depth and as determined by the Engineer) is achieved. Reject any equipment and personnel that do not produce satisfactory results.

Locate the trial area within a uniform section of the deck that appears in good shape (i.e. "sounder" concrete where deterioration or delamination is not present). Also make sure the trial area is also not located in an area where previous patching is present. The patching material used typically has a significant higher strength than the original concrete and could result in an over-removal of Class A material.

Removal both above and below (e.g. when patches or delaminated concrete are encountered) the mean depth is expected for this type of work, is included in the contract unit price (for Class A removal) and is addressed in the specification:

- "*If the hydrodemolition removal extends beyond the mean removal depth where unsound concrete is encountered, it shall still be considered Class A removal and shall not be considered any work at additional cost to the state.*"
- *"Any concrete not removed to specified limits during hydrodemolition shall be removed by mechanical means."* Again, this would be at no additional cost to the state.

These points should be emphasized to the contractor during the pre-operational conference.

The system operating parameters for Class A removal are established based on satisfactory removal of the trial area and is critical for ensuring that the mean removal depth is attained during production. The depth of cut is adjustable in several ways and includes: the rate of travel forward by the mill, the rate of traverse on the cutting arm, the size of orifice in the water jets and the angle of their attack. The depth of removal is normally adjusted using only one variable: the rate of travel by the forward mill. Document the trial area work in the construction diary and obtain a copy of the established operating parameters for the project files.

Verify that the equipment has begun moving prior to the actual removal. Monitor and document removal depths and overlap of equipment passes throughout production. Watch for areas of deteriorated concrete or patching. Some contractors try to reduce Class A patching removal and Class B removal requirements by setting the operating parameters higher than what is needed for the specified removal depth. This can result in an increase in deck "blowouts" because of excessive water pressure and increase the volume of material needed for the deck overlay. Patches frequently require removal by mechanical means because of its high strength. Verify that the contractor is adjusting for depth of cut appropriately during production. If not, stop work and discuss.

Also verify that the actual depth of the reinforcing steel is not higher than what is shown in the plans. The design intent of Class A removal is to take off the concrete surface that is above the top mat of reinforcing steel (though again some exposure is expected). The mean removal depth may need adjustment if the reinforcing steel was higher than what was shown in the plans.

Finally, ensure that the contractor is adequately supporting any exposed unsupported reinforcing steel following Class A removal and that it is protected from construction operations. Do not allow any equipment on unsupported reinforcing steel. Require the contractor to repair any damaged reinforcing steel. The approved repair method is at contractor expense.

Mechanical Removal

Class A removal by mechanical means is either by power operated diamond grinding machinery or jackhammers. Diamond grinding is used in lieu of hydrodemolition while jackhammers are normally employed for removal of patching material, other discrete areas that may be higher than the specified removal depth, and areas inaccessible to the hydrodemolition equipment.

If diamond grinding is to be employed, contact the manufacturer of the equipment to verify what equipment operating requirements are required for the specific project in question. Document the results in the project file.

Verify that equipment maximum ratings are not exceeded. See the specification for specific removal requirements.

Communicate to the contractor the specification requirement that: *"If any reinforcing steel is exposed…immediately stop work and request instructions from the Engineer."* The Engineer should then evaluate the best method(s) for protecting the rebar from being damaged or de-bonded from the concrete. This may require changing the type of jackhammer bit or raising the grinder teeth to avoid nicking the rebar.

Runoff and Cleaning

The demolished concrete and water combine into a mixture of rubble; slurry and excess water, that must be contained and removed (See specification for containment and removal requirements). Do not allow brooming as an option for cleaning. Brooming does not effectively remove fine particles.

Ensure that the cleaning is timely (i.e. promptly follows removal) so that the material is not allowed to dry. If the material is allowed to dry it will adhere to the deck and become extremely difficult to remove. Regardless, the deck must be completely cleaned of all debris and water to ensure that a clean, bondable surface remains.

Cleaning of Exposed Reinforcing Steel

Also included in Class A removal is cleaning any exposed reinforcing steel of rust, scale and corrosion. This is necessary so that the new deck overlay material will bond with the steel. The hydrodemolition operation typically removes a majority of rust, scale and corrosion but the contractor may still have to employ additional methods such as sandblasting. Verify that the steel has been adequately cleaned.

CLASS B REMOVAL

Class B removal is comprised of removing: 1) localized areas of detoriated concrete remaining after Class A removal, and 2) concrete around de-bonded reinforcing steel. Areas for removal are designated by the Engineer and should be clearly marked in the field. Verify that equipment maximum ratings are not exceeded. See the specification for specific removal requirements.

Remember, partially exposed reinforcing steel does not automatically mean it is de-bonded. Verify bonding conditions before requiring removal. Removal of concrete around bonded reinforcing steel tends to cause loosening ahead of the process and could result in excessive removal.

DOCUMENTATION FOR PAY QUANTITIES

Payment for both Class A and B removal is by area and require field measurements. Provide the Contractor with quantity computations regularly throughout the work. Quantities and computations can be reported via the construction diary, the pay item report or the ITD-404.

REPORTS

Document all discussions, work activities including locations and depth of removal verifications in the construction diary. Supplement with photographs and videos especially if there are any issues or irregularities that occur.

634.00 MAILBOX

General

Mail boxes and their supports must meet the Departments' minimum standards for construction as shown in the ITD Standard Drawings. ITD standard Drawings H-5-A,B,C reference mail box details. Mail boxes and newspaper appurtenances can be a safety hazard depending on the cross section dimensions of the highway, sight distance, the impact resistance of the support, traffic volume and if vehicles must occupy a portion of the travel way when accessing the mailbox.

If possible the mailbox and support should be erected with the following considerations in mind: (1) easy access in an area not exposed to traffic; (2) good sight distance in advance of the mail box; (3) be of the nature and type that do not present a hazard if struck by a vehicle or contain supports that break away safely if struck.

Mail boxes should be located behind guard rail if possible or outside the acceptable clear zone for the type of roadway involved.

Current postal regulations should be consulted for specific set-backs requirements applicable to the area and roadway type involved. Additional guidance on mail box installations can be found in the latest edition of *AASHTO's A Guide for Erecting Mailboxes on Highways.*

Documentation for Pay Quantity

The diary shall be used to verify the activity, date, and location of the work. Quantities will also be documented by diary entry.

Excavation and compacting backfill work related to the mailbox installation is considered incidental unless otherwise specified.

Reports

None.

656.00 TRAFFIC SIGNAL INSTALLATIONS

General

This work is very specialized requiring the services of a licensed electrical Contractor. Few inspectors have had sufficient experience to thoroughly and adequately inspect this type of work. To overcome this problem, it is recommended that the District Signal Electrician or electrician work closely with project personnel to assure plan and specification compliance.

Experience has proven that many potential problems can be averted or minimized by a special pre-operational meeting involving the electrical Contractor or subcontractor, project personnel, and the Signal Shop Superintendent or District Signal Electrician. This special pre-operational meeting should be held immediately prior to starting the electrical work. It is especially important that the Contractor's job Superintendent or Foreman attend this meeting. The conduct of the meeting should be informal and cover the real "nuts and bolts" problems that may be expected or that have occurred on previous projects.

Common Construction Errors

Over the years, a number of recurring construction errors have been discovered regarding electrical work either at final inspections or later when maintenance work was being performed. A list of these more common errors follows. This list is included as a reminder for inspection personnel and should not substitute for the pre-operational meeting where this list of errors should be presented and discussed with the Contractor.

A. Common Conduit Installations Problems

1. Use of plastic conduit for elbows greater than 45° instead of steel (as required) causing conduit to be cut when wire is pulled.
2. Minor bends in conduit without proper use of bending tool causing partial collapse of conduit and resultant problems pulling wire through conduit.
3. Use of rocky material for conduit backfill instead of fine soil/sand results in eventual collapse of conduit.
4. Failure to clean dirt and moisture from conduit prior to pulling wire.
5. Failure to cap stub/free ends of conduit resulting in intrusion of soil and moisture.
6. Conduit buried at less than required 24 in. (0.6 m) depth causing future maintenance problems, such as inadvertent cutting or mashing of conduit.
7. Placement of conduit by other than a certified licensed electrical Contractor. This can result in rejection by the State Electrical Board.

8. Placement of conduit at locations other than shown on the plans without proper indication on the as-constructed plans.

B. Common Foundations Problems

1. Improper or wrong size anchor bolts installed or installed out of alignment for proper pole base plate fit.
2. Foundation not set at proper elevation.
3. Improper backfilling or lack of mechanical tamping around foundation may result in eventual tipping of the foundation and pole.
4. Failure to grout under the base of pole.
5. Improper placement of structural concrete per section 502.03 (exceeds 5 ft. max drop).
6. Improper size of signal cabinet foundation installed. This is a common problem with projects that have multiple signal installations and it is assumed that all cabinets take the same foundation.

C. Common Pole Erection Problems

1. Rotation of signal mast arm 180° from designed position resulting in a drooping instead of a raked appearance.
2. Failure to accurately plumb poles after all hardware is in place.
3. Failure to properly tighten fasteners.
4. Failure to clean or chase internal threads, prior to component attachment.

D. Common Expansion Fittings Problems

1. Failure to install a proper conduit expansion unit at structure expansion joints.
2. Failure to provide expansion couplings on long runs of plastic conduit may result in buckling of the conduit.

E. Common Wiring Problems

1. Failure to use a wire lubricant prior to pulling through conduit may damage the wire, its insulation, or the conduit.
2. Use of extreme force and speed to pull wire such as with a vehicle may damage wire, its insulation, or the conduit.
3. Failure to pull signal cable by hand may damage insulation due to the sharp bends normally required in signal installations.
4. Unauthorized splices in buried or concealed junction boxes that create future maintenance problems.
5. Failure to use insulated bushings at conduit entrances to metal junction boxes, cabinets, etc. will scuff insulation from the wire when it is pulled.
6. Unauthorized splices in signal cables (signal head wiring, video or loop detection). The specifications allow no splices, as splices are a common source of problems in signal installations. The cable must be continuous between terminal connections.
7. Use of wrong type or size of wire or wire with improper insulation.

8. Failure to use approved wire connectors and insulated splice kits.

F. Common Signal Loop Wiring Problems

1. Improper splicing of signal loop detector lead-in wire which may break down causing moisture to enter the splice and ground the loop making it inoperable.
2. Improper use of shielded conductors for loops.
3. Use of a loop lead-in wires other than the approved type.
4. Allowing the Contractor to use a sharp instrument, such as a screwdriver, to force loop wire into the sawed slot causing damage to the wire or insulation.
5. Use of a tar or asphalt sealer which are not approved for use on loops and splices.
6. Use of non-approved loop sealant.
7. Slots sawn for loop detectors, not wide enough for proper embedment in sealant.
8. Loop system testing not being recorded and certified on ITD form #2698

G. Common Video Detection Problems

1. No site review by manufacturer's representative(s).
2. Improper field of view set in camera.
3. Improper detection zones in configurations. Must be per the detector loop spacing plan (Standard Drawing I-5.)
4. No consideration for seasonal low sun angles.
5. No follow up to confirm operation during dusk to dawn operation.

H. Common Interconnection Problems

1. Fiber optic interconnect system is not properly installed to control minimum bending requirements of fiber optic cable.
2. A specified length of fiber optic cable is not installed in maintenance loops.

I. Common Grounding Problems

1. Failure to connect poles, junction boxes and other equipment to the service ground by an insulated AWG 8 soft-drawn stranded copper wire.

14-Day Field Test

It is the intent of this specification to provide two weeks of standard operation with photocell, manual, or other specified turn-on control. During this test, the Contractor should be responsible for all corrective work resulting from improper installation, workmanship or materials. Following successful completion of the test, the Resident should recommend partial acceptance covering signalization. The cost of power consumed during the test period should be borne by the agency or agencies assigned maintenance responsibility by the cooperative project agreement.

Documentation for Pay Quantities

The diary shall be used to verify the activity, date, and location of the work.

Reports

None.

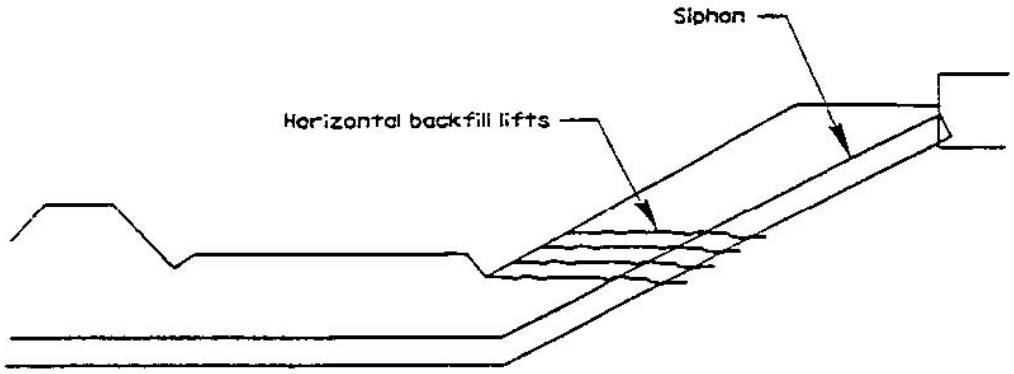

Backfill of Siphon Section in Back Slope

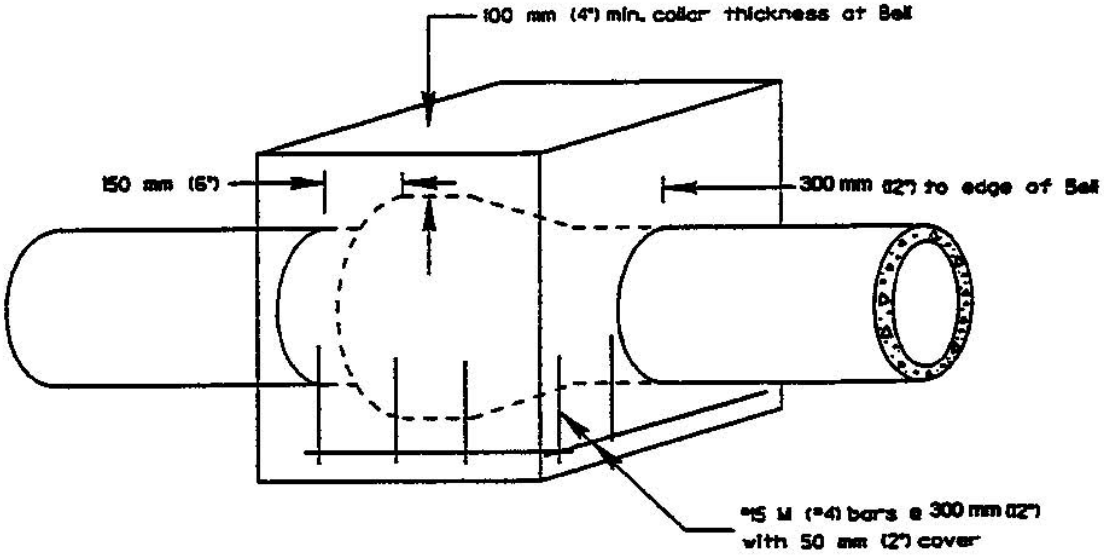

Repair of Joint with Concrete Collar

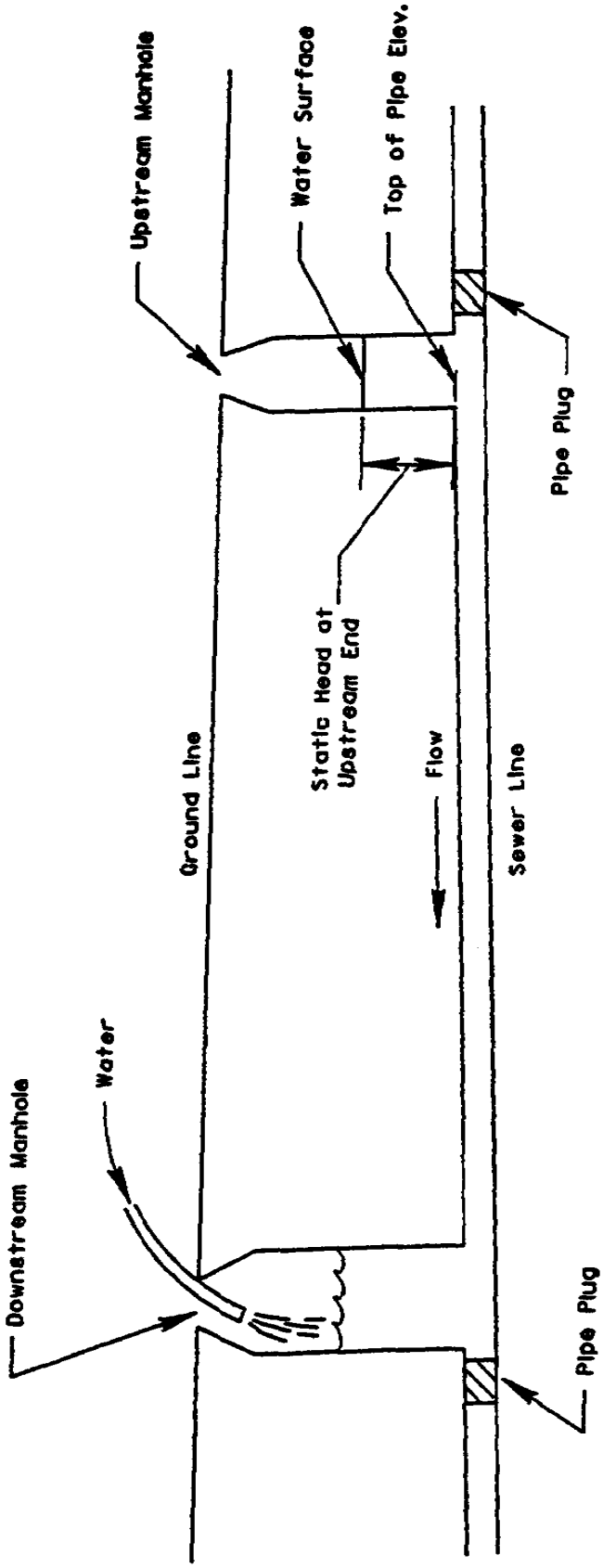

Testing Sewer Pipe Line